Use of discharge plasma for environmentally benign production of hydrogen

Franz-Josef Spiess[1], Steven L. Suib[1], Kanji Irie[2], Yuji Hayashi[3], and Hiroshige Matsumoto[4]
(1) Department of Chemistry, University of Connecticut, 55 N.Eagleville Rd., U-3060, Storrs, CT 06269, Fax: 860-486-2981, (2) Daido Steel Co., Ltd, Daido Steel, (3) Nagasaki University, (4) Fujitsu Laboratories Ltd

Introduction

Fuel cells are considered the future of transportation. In a fuel cell, hydrogen and oxygen are consumed and produce just water as an exhaust gas. In order for the fuel cells to become more competitive, the cost of hydrogen production has to be much lower. There are several ways hydrogen can be produce today. Electrolysis, water splitting via solar energy or thermochemical water splitting can be used as described in a review by Czuppon et al (*1*).

Licht et al. report the possibility of over 18 % conversion of water by solar energy to hydrogen fuel based on calculations and experiments with RuS_2 being one of the candiates (*2,3*). Other materials like oxide semiconductor photocatalysts like doped $InTaO_4$ or TiO_2 (modified or in conjunction with sonication) were investigated as well (*4-6*). Mechano-catalytic methods and biological hydrogen from fuel gases and water are promising concepts, as well (*7,8*).

Our research group previously worked on water splitting with discharge plasmas (*9-11*). In two cases (*8,9*) argon was the diluant gas, in the other (*10*), it was helium. In this work, methane was used as the diluant with admixtures of nitrogen or argon.

Experimental

A simple setup was used as shown in Figure 1. The tubular reactor consists of a porous, hollow copper as an inner electrode in a quartz tube (12 mm outer diameter), which is wrapped with aluminum foil as an outer electrode.

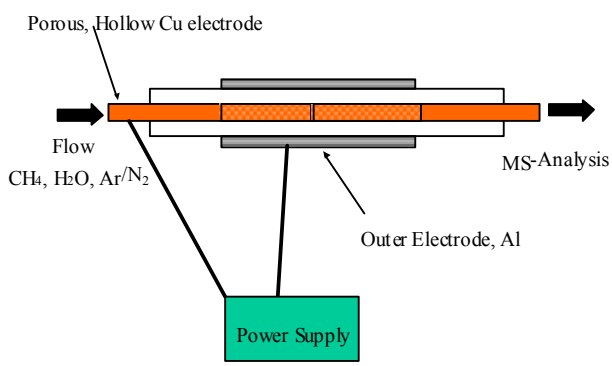

Figure 1. Reaction setup showing a tubular reactor and the connections to the power supply

The feed is a mixture of water (introduced by a bubbler), and methane with admixtures of argon or nitrogen as needed. The content of the feed gas is 3 % water and balance methane at flow rates of 5 to 250 mL/min. The reaction mixture was continuously monitored with a MKS-UTI PPT quadrupole residual gas analyzer mass spectrometer with a Faraday cup detector and a variable high-pressure sampling manifold. The system was equilibrated at the beginning and then the voltage was turned on to the desired level and continued until an equilibrium value was achieved. The electrodes used were provided by Dr. Hayashi of Nagasaki University or designed and assembled in your lab. Gases used were obtained from commercial vendors like Airgas.

Results and Discussion

Initial studies using air and nitrogen as balance gases in tubular and fan PACT reactors showed a hydrogen yield of up to 23 % (relative %) based on the water put in. Ways to improve the conversion to hydrogen were sought. Several modifications in the gas composition were tried. Preliminary tests with methane were done and showed promise.

The tests in this area were intensified. A more thorough calibration curve for the methane/hydrogen mixture was established than the one used in the preliminary experiments with a mass spectrometer as the online analysis device.

The experimental conditions are similar to the ones used in earlier experiments. The peak-to-peak voltage used was 1.0 to 1.1 kV and currents around 200 mAmps yielding a power of about 5 Watt. The gases used were argon, nitrogen, methane and water vapor. The gases were mixed online as needed. The electrode was the porous hollow copper electrode in all these experiments.

In the first set of experiments, water (3.1 %) was mixed with balance nitrogen. The reaction was observed at various flow rates ranging from 5-250 mL/min, and the voltage (peak-to-peak) was kept at a constant 1.022 kV. The calibration was carried out before and after the experiment and yielded the same values.

The hydrogen production (here as volume %) is shown in the Figure 2. It follows an exponential decline with respect to the applied flow rate. It might be that there is a maximum conversion in the range around 5 mL/min, but the lowest achievable flow rate was 5 mL/min below that it is difficult to achieve flow because of the rotameter used in the setup. The highest hydrogen production achieved is about 15 % (total volume percent of the mixture). This is not the conversion of water or methane to hydrogen. The input concentration of water is 3.1 % (by volume).

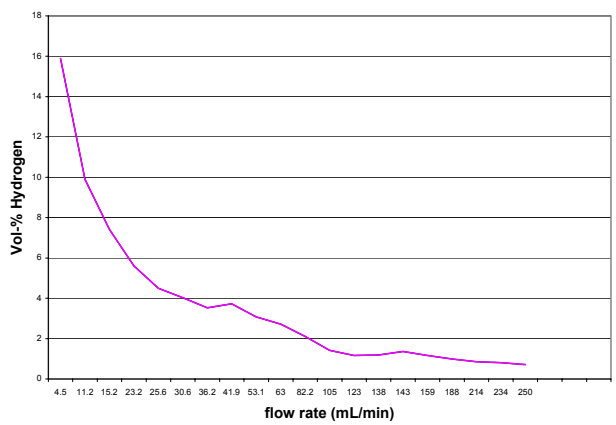

Figure 2. Hydrogen production in volume-% in relation to the applied flow rate.

The decomposition of methane follows the same trend as the hydrogen yield as seen in Figure 3 (solid line). It is highest at low flow rates at about 35 %. The decomposition rate of methane is lower than the hydrogen yield calculated from methane as seen in figure 3 (dotted line). Therefore it is believed that water contributes to this number significantly.

In the second set of experiments, the flow rate was set at 20 mL/min. This time, argon, was mixed in at different ratios to methane. A significant effect is seen on the conversion is this case as seen in Figure 4. The conversion drops and is almost independent

from the methane content in the range from 25 to 75 % by volume argon at the set flow rate.

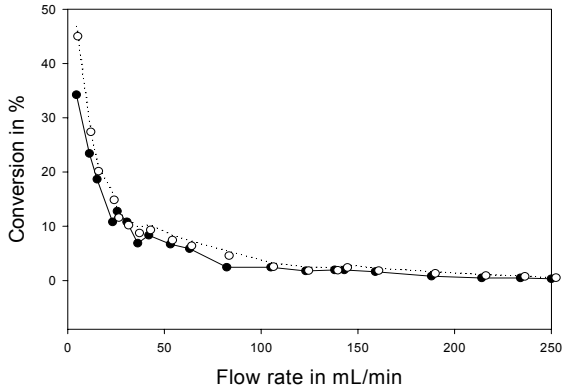

Figure 3. Decomposition of methane in relation to flow rate (solid line) and conversion of water and methane to hydrogen in relation to flow rate (dotted line).

The same experiment was carried out, at the exact flow rate. In this case nitrogen was mixed with methane at different ratios. The results are comparable to the ones obtained in the argon case, but the conversion as slightly lower in the nitrogen case. The conversion in pure nitrogen is significantly lower than in the case of methane alone, in the case of argon it is slightly higher.

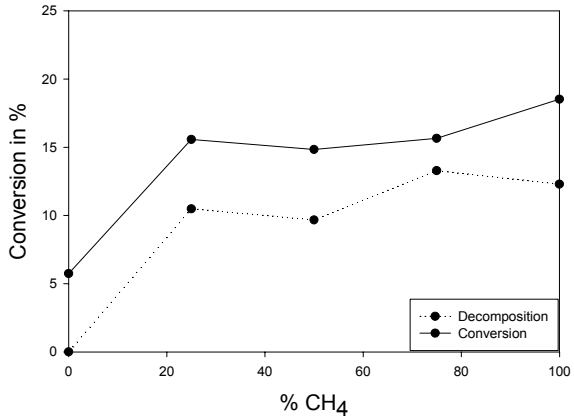

Figure 4. Decomposition of methane in relation to methane content (dotted line) and conversion of water and methane to hydrogen in relation to methane content (solid line).

Furthermore, it was observed that carbon deposits form on the copper electrode. These deposits have been collected and sent in for analysis, but the results weren't received yet. It is hard to get these deposits off the electrode, especially due to the brittle character of the electrode.

It was tried to determine, the conversion of methane alone to hydrogen, but it was impossible to get water totally out of the system. Even after purging the setup with nitrogen over an entire weekend, water was not removed.

Other electrodes will be tried in the future; maybe different metal hollow electrode could be tried. Other ideas to increase the conversion are to introduce a higher level of water vapor by different means.

Carbon monoxide and carbon dioxide are also detected as product in the mass spectrometric analysis. It is believed that the oxygen of the water reacts with the carbon of methane to form these oxides and hydrogen is formed thereby. The other important reaction is the decomposition of methane to coke (as evident in the deposits on the electrode) and hydrogen. These products might react further to higher saturated or unsaturated hydrocarbons. This aspect will be investigated further.

Conclusions

The decomposition of a combination of methane and water by discharge plasma represents a promising way to produce hydrogen. Hydrogen production of up to 16 % is shown. Furthermore, the effects of admixtures of nitrogen and argon are demonstrated. The main products are hydrogen, coke and carbon monoxide and dioxide. Several aspects of the reaction can be optimized like the applied voltage. A preliminary reaction scheme is suggested and will be refined by complementary experiments.

Acknowledgement. The authors thank JFCC and Daido Steel Co. for support of this research. We also thank Dr. Guanguang Xia and Dr. William Willis for assistance in the power measurements and reactor setup.

References

(1) Czuppon, T. A.; Knez, S.A.; Newsome, D.S. in *Encyclopedia of Chemical Technology;* Kirk-Ohmer; 4th ed.; Wiley: New York, NY, 1991; Vol. 13, p. 867.
(2) Licht, S.; Wang, B.; Mukerji, S.; Soga, T.; Umeno, M.; Tributsch, H.; *Int. J. Hydrogen Energy* **26 (2001),** 653, 659.
(3) Licht, S.; Ghosh, S.; Tributsch, H.; Fiechter, S. *Sol. Energy Mater. Sol. Cells* **70 (2002),** 471-480.
(4) Zou, Z.; Ye, J.; Sayama, K.; Arakawa, H. *Nature* **414 (2001),** 625-627
(5) Abe, R.; Sayama, K.; Domen, K.; Arakawa, H. *Chem. Phys. Lett.* **344 (2001),** 339-344.
(6) Harada, H.; Hosoki, C.; Kudo, A. *J. Photochem. Photobiol., A* **141 (2001),** 219-224.
(7) Hitoki, G.; Takata, T.; Ikeda, S.; Hara, M.; Kondo, J. N.; Kakihana, M.; Domen, K. *Catal. Today* **63 (2000),** 175-181.
(8) Chen, X.; Marquez, M.; Rozak, J.; Marun, C.; Luo, J.; Suib, S. L.; Hayashi, Y.; Matsumoto, H. *J. Catal.* **178 (1998),** 372-377.
(9) Chen, X.; Suib, S. L.; Hayashi, Y.; Matsumoto, H. *J. Catal.* **201 (2001),** 198-205.
(10) Luo, J.; Suib, S. L.; Hayashi, Y.; Matsumoto, H. *J. Res. Chem. Intermed.* **26 (2000),** 849-874.