Regenerable Aqua Ammonia Process for CO_2 Sequestration

James T. Yeh[1], Kevin P. Resnik[2], and Henry W. Pennline[1]

(1) National Energy Technology Laboratory, U.S. Dept. of Energy, NETL P.O. Box 10940, Pittsburgh, PA 15236-0940, Fax: 412-386-6004 james.yeh@netl.doe.gov, (2) National Energy Technology Laboratory, Parsons Project Services, Inc

Introduction

The monoethanolamine (MEA) process is currently the most widely-used industrial process for CO_2 purification for various commercial applications. If the source of CO_2 comes from fossil fuel combustion, the cost of CO_2 capture is acceptable by current users because of the high value of the final product. However, the MEA process is considered to be too expensive for greenhouse gas reduction purposes because of the excessively high quantity of CO_2 that must be captured from coal-burning power plants. Additionally, the regeneration step of the MEA process is energy intensive, and the CO_2 product has little commercial value due to the anticipated overproduction.

It is envisioned that the MEA process could be replaced with an aqua ammonia process to capture all three major acid gases (SO_2, NO_x, and CO_2, plus HCl and HF), that may exist in the flue gas. Since SO_2 and NO_x emissions must comply to certain limitations, a single process to capture all acidic gases is expected to reduce the total cost and complexity of emission control systems. Currently CO_2 is not regulated in the United States, although a limit on CO_2 emissions in the future could become a reality. Unlike the MEA process, the aqua ammonia process is not expected to have degradation problems due to SO_2 and oxygen. In addition, the ammonia solution has a higher CO_2 loading capacity than MEA. A rich ammonia solution requires much less thermal energy to regenerate than a rich MEA solution.

Very few research reports in the usage of ammonia for CO_2 capture are available. China has combined an aqueous NH_3 solution and CO_2 gas to produce ammonium bicarbonate (ABC) fertilizer for about 40 years. Currently (2003), 43% of the fertilizer used in China is ABC [1]. Bai and Yeh [2] reported on the study of CO_2 absorption by aqueous ammonia and the resultant CO_2 loading capacity. Yeh and Bai [3] compared CO_2 loading capacity of aqueous ammonia and MEA solutions.

The following reactions show the reaction byproducts between CO_2 and aqueous ammonia:

$$2\,NH_3 + CO_2 \leftrightarrow NH_2COONH_4 \quad (1)$$
$$NH_2COONH_4 + CO_2 + 2H_2O \leftrightarrow 2NH_4HCO_3 \quad (2)$$
$$NH_2COONH_4 + H_2O \leftrightarrow NH_4HCO_3 + NH_3 \quad (3)$$

$$NH_3 + H_2O + CO_2 \leftrightarrow NH_4HCO_3 \quad (4)$$

$$2NH_3 + H_2O + CO_2 \leftrightarrow (NH_4)_2CO_3 \quad (5)$$
$$(NH_4)_2CO_3 + CO_2 + H_2O \leftrightarrow 2NH_4HCO_3 \quad (6)$$

In this study, experiments were conducted to determine the CO_2 loading of aqueous ammonia solutions that were subjected to three absorption and regeneration cycles. A reasonable loading was determined and used in the preparation of a process flow diagram for the process as a basis of comparison to the current MEA process. Studies of the regeneration of prepared solutions of ABC and ammonium carbonate (AC) were also conducted.

Experimental

Absorption. The absorption tests take place in a semi-batch bubble reactor equipped with a mixer operating at 1600 rpm. A simulated flue gas consisting of 15%vol CO_2 and 85%vol N_2 is bubbled through ⅜" tubing at a flow rate of 7300 sccm. The absorber is a 3-liter glass container filled with 1500-ml aqueous ammonia solution. The temperature of the solution is controlled by pumping water from a recirculating heater through an immersed ¼" tubing coil. Typically, absorption tests were conducted at 27°C. The reactor pressure is maintained at 1 psig to supply motive energy to the gas analysis system. A reflux condenser dries the gas to a dewpoint of approximately -12°C. The gas is bubbled through the reactor until the CO_2 concentration is 95% of the inlet, or the flow stops due to plugging of the gas inlet tubing as a result of precipitation of the ABC. Data from an infrared CO_2 gas analyzer is analyzed to determine the amount absorbed as a function of time.

Regeneration. Regeneration tests utilize much of the same equipment, with the following exceptions. The ¼" heating coil is replaced with a ⅜" coil to increase the heat transfer. The mixer is replaced with a magnetic stirrer. A 2000 ml reactor is used to minimize the headspace and gas residence time. Although the regeneration is performed in a batch mode, the gas inlet is rerouted to the reactor's vent line and metered nitrogen acts as a sweep gas to the analyzer. The temperature of the solution to be regenerated is ramped from ambient to at least 82°C, with stops at 49°C, 54°C, 60°C, and 71°C.

Test Matrix. In the first series of tests, regeneration experiments with mixtures of ABC and AC were conducted to determine the amount of CO_2 evolved from the solution as a function of temperature.

In the second series of tests, aqueous ammonia solutions containing 7%, 10.5%, and 14% ammonia are prepared by diluting a 28% NH_3 solution. An absorption test is conducted. The saturated (rich) liquid is then regenerated at 82°C. The lean solution is used in an absorption test. The absorption / regeneration cycle is repeated for a total of three times (approaching a steady-state condition), and the totalized amount of CO_2 absorbed or regenerated is calculated.

Results and Discussion

Figure 1 shows the amount of CO_2 liberated by thermal regeneration from standard solutions of ABC and AC as a function of temperature. The dependent variable in **Figure 1** represents the total percentage of the original carbon in the solution that was evolved up to that temperature. It is evident that as the proportion of bicarbonate in the solution increases, the CO_2 is more easily regenerated. It is demonstrated that as much as 60% of the carbon in the solution can be regenerated, which in a continuous process would free the ammonia for the absorption cycle.

Table 1 shows the effect of cycling various initial compositions of ammonia on the absorption and regeneration capacity for each step of the three-step cycling process.

Table 1. CO_2 Absorbed (g/g solution) per Cycle at Varying NH_3 Concentrations

Initial NH_3 (%)	7.0	10.5	14.0
1st Absorption	0.111	0.141	0.157
2nd Absorption	0.044	0.054	0.067
3rd Absorption	0.039	0.053	0.068

For each of the three initial NH_3 concentrations, the data show that after the first cycle, the amount of CO_2 absorbed is converging to a constant value. It is important to note that the NH_3 concentration listed is the initial NH_3 concentration for the solution. As expected, there is an evaporation of NH_3 into the vent gas from the reactor, primarily during the first absorption cycle, partially explaining the reduction in the capacity of the solution to absorb CO_2 in subsequent cycles. For example, based on mass balance calculations, 36% of the NH_3 was lost during the first absorption cycle with an initial NH_3 concentration of 14%. After the three absorption/regeneration cycles, the residual solution contained approximately 8% ammonia. It is believed that incomplete regeneration of the solution is responsible for the remainder of the absorption capacity loss.

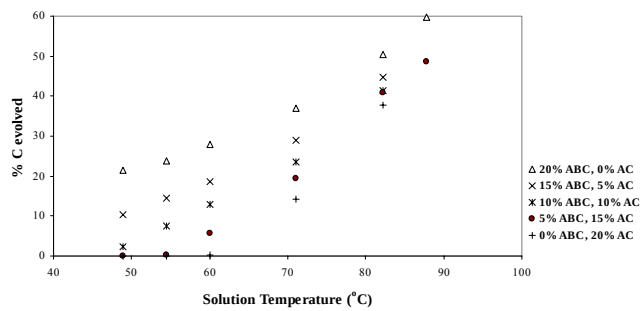

Figure 1. Regeneration Test Summary

The heat required for regeneration is a combination of sensible heat, heat of reaction, and latent heat of vaporization. **Table 2** shows the relative contribution from these energy requirements for both MEA and aqueous ammonia solutions. Three potential reactions could be responsible for liberation of CO_2 during the thermal regeneration:

$2NH_4HCO_3(aq) \leftrightarrow (NH_4)_2CO_3(aq)+CO_2+H_2O$ H_r= 6.4 kcal/mol (7)
$NH_4HCO_3(aq) \leftrightarrow NH_3(aq) + H_2O + CO_2(g)$ H_r= 24.1 kcal/mol (8)
$(NH_4)_2CO_3(aq) \leftrightarrow 2NH_3(aq)+H_2O+CO_2(g)$ H_r= 15.3 kcal/mol (9)

Due to current uncertainty of the dominant regeneration reaction, the three potential reactions are compared in **Table 2**.

Based on the CO_2 loading data derived from the cycling tests and the calculated energy requirements, a basic process flow diagram for an aqueous ammonia process was developed. The proposed process flow diagram is shown in **Figure 2**, and a comparable MEA process flow diagram is shown in **Figure 3**.

Table 2. Regeneration Energy Required of an 8% Aqua Ammonia Process Compared to Current 20% MEA Technology

	ΔH_{rx} (kcal/mol)	Sensible Heat* (kcal/mol)	Heat of Vaporization (kcal/mol)	Total (kcal/mol)	Reduction from MEA process (%)
MEA	20.0	79.4	18.9	118.3	0
NH_3 (eq. 7)	6.4	36,0	0	42.4	64
NH_3 (eq. 8)	24.1	36.0	0	60.1	49
NH_3 (eq. 9)	15.3	36.0	0	51.3	57

* Sensible heat = mass of solution(g/mol CO_2) * C_p (assume .001 kcal/g-°C) * ΔT_{rx} (°C)

Absorption can take place between 16°C and 38°C in the aqua ammonia process. The CO_2-rich stream is pumped through a heat exchanger to the regenerator, where the solution is heated to 82°C and CO_2 gas is released from the heated solution. The pure CO_2 can be collected for later sequestration. The CO_2-lean solution from the regenerator is recycled back to the absorber for reuse. During the regeneration, not all of the CO_2 in the solution will be released. A similar procedure is used in the MEA process.

The advantages of the aqua ammonia process include: a lower liquid flow rate, lowering capital equipment and pumping costs; no stripping steam is required for the regeneration; a higher CO_2 capture capacity per gram of solution; and a lower heat of reaction. The last three advantages result in a potential regeneration energy savings of up to 64% compared to the current MEA process.

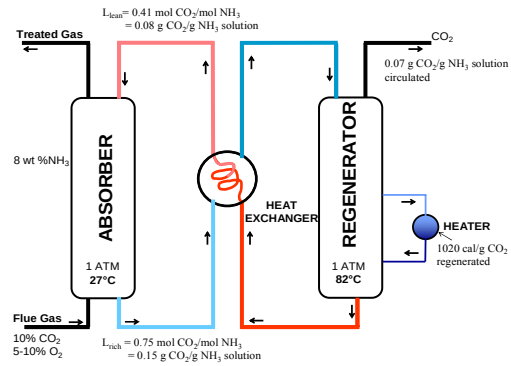

Figure 2. Process Flow Diagram for Aqua NH_3 CO_2 Capture Process

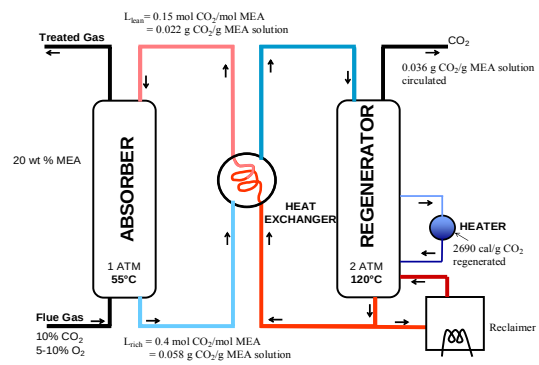

Figure 3. Process Flow Diagram for Typical MEA CO_2 Capture Process

Conclusions

Carbon dioxide transfer capacities of aqueous ammonia solutions and monoethanolamine (MEA) solutions were compared. The CO_2 carrying capacity in grams of CO_2 per gram of NH_3 solution circulated is 0.07 as compared with 0.036 grams of CO_2 per gram of MEA solution, thus the energy requirement for liquid mass circulation of an ammonia solution is approximately 50% that of an MEA solution for equal weight of CO_2 carried. In another comparison, the thermal energy required to regenerate CO_2 from the rich solution is substantially less as compared to the MEA process.

References

[1] Zhang, Zemin , et al – *New Type of Nitrogen Fertilizer-Long Lasting Ammonium bicarbonate,* Chemical Industry Publishing, Beijing, China, January, 2000. IBSN 7-5025-2619-6.

[2] Bai, H. and A.C. Yeh, Removal of CO_2 Greenhouse Gas by Ammonia Scrubbing. I.E.C.Res., Vol. 36, No.6, 1997.

[3] Yeh, A.C. and H. Bai, Comparison of Ammonia and Monoethanolamine Solvents to Reduce CO_2 Greenhouse Gas Emissions. The Science of Total Environment, pp 121-133, 1999.