ABSORPTION CHARACTERISTIC OF CONTINUOUS CO_2 ABSORPTION PROCESS

Sung-Youl Park, Byoung-Moo Min, Jong-Sup Lee, Sung-Chan Nam, Keun-Hee Han and Ju-Soo Hyun

Combustion Gas Clean-up Technology Center
Korea Institute of Energy Research
71-2, Jang-Dong, Yuseong-Gu, Daejeon, Korea

Introduction

Carbon dioxide is widely recognized as a major component of greenhouse gas contributing to global warming and produced in large quantity from various industrial sources, including fossil fuel firing electric power generation, steel production, chemical and petrochemical manufacturing, cement production, etc. Due to the increased CO_2 mediated global warming problems, strong and adverse affects on the development of a large number of industries in the near future are expected. As a means of mitigating the global warming, removal of CO_2 from industrial flue gas is considered important. The means of CO_2 removal include absorption by chemical solvents, physical absorption, cryogenic separation, membrane separation and etc. Among these methods, CO_2 absorption by alkanol amine(MEA) aqueous solution has been considered as the most efficient way and various research activities were conducted by this method and most commercial processes for the bulk removal of CO_2 from gaseous streams involve the use of amines[1,2,3]. Traditionally, only random packings are used as the gas-liquid contacting media inside the absorption and regeneration towers. It has been suggested that using high efficiency column packings in these towers could substantially improve the efficiency of the gas treating process which reduce its capital cost. Hydrodynamics and mass transfer characteristics, including flooding capacities, gas and liquid mass transfer coefficients, interfacial area and liquid hold up are essential for evaluating the effectiveness of the tower packings and also important for the reliable design and operation of the CO_2 absorption processes[4].

Experimental

CO_2 Absorption Process. The configuration of apparatus used in this experiment has typical arrangement of CO_2 absorption process as shown in **Figure 1**.

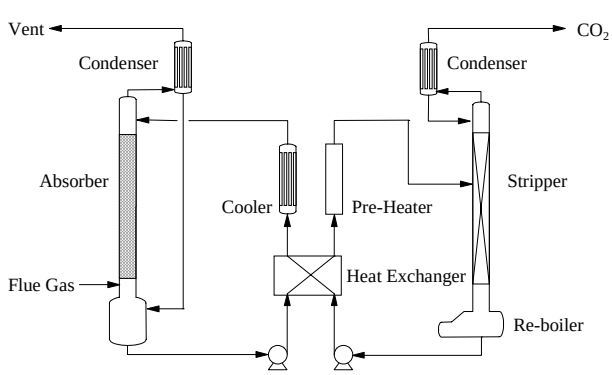

Figure 1. Simplified diagram of CO_2 absorption process.

The facility consists of diesel oil boiler, flue gas reservoir, flue gas supply pump, packed column absorber, sieve tray stripper, re-boiler for absorbent regeneration by evaporation, preheater for heating of CO_2 rich absorbent before stripping, heat exchanger for CO_2 rich and regenerated absorbent and condensers for vent gas of absorber and stripper.

Flue Gas and Absorbent. Flue gas used in this experiment is generated from the combustion of kerosene. After cooling, the generated flue gas is transferred to flue gas storage reservoir and then supplied to CO_2 absorber under flow rate control by dry gas flow meter. Boiler operation is appropriately manipulated to prevent soot generation and keep CO_2 concentration of flue gas about 12vol%.

Absorbent used in this experiment is prepared by the mixing of MEA with distillated water. 99.0wt% MEA(Nippon Sakubai) is diluted to 30wt% of aqueous MEA solution. Before absorbent loading, absorber and stripper is cleaned by distillated water and nitrogen.

Packing Material. As a packing material, raschig ring, intalox saddle and Pro-Pak is randomly packed in absorber. Physical properties of the packing material are shown in **Table 1**.

Table 1. Physical Properties of Packing Material

Packing material		Raschig ring	Intallox saddle	Pro-Pak
Size	(inch)	1/4	3/8	1/4
Packing density	(kg/m^3)	960	801	336
Specific surface area	(m^2/m^3)	710	801	1220
Void fraction	(%)	62	67	96

Measurement and Analysis Methods. Flue gas flow rate is measured by dry gas flow meter and absorbent flow rate is measured by liquid flow meter. Analysis of flue gas components is performed for absorber inlet and stripper outlet. CO_2, O_2 and N_2 of flue gas are analyzed by on-line gas chromatograph(HP6890) equipped with TCD and packed column(Carboxen 1000).

Results and Discussion

The design of absorption column and similar equipment is necessarily based on information concerning the diffusion from one to the other of two phases being contacted[5]. Operating hold-up is an important factor in gas-liquid mass transfer. Operating hold-up is defined as the difference between total hold-up and static hold-up. Static hold-up is the liquid volume per unit volume of the bed which does not drain from the packing when the liquid supply to the column is stopped[6]. Operating hold-up and flue gas pressure drop of absorber using different types of packing material was measured and shown in **Figure 2.**

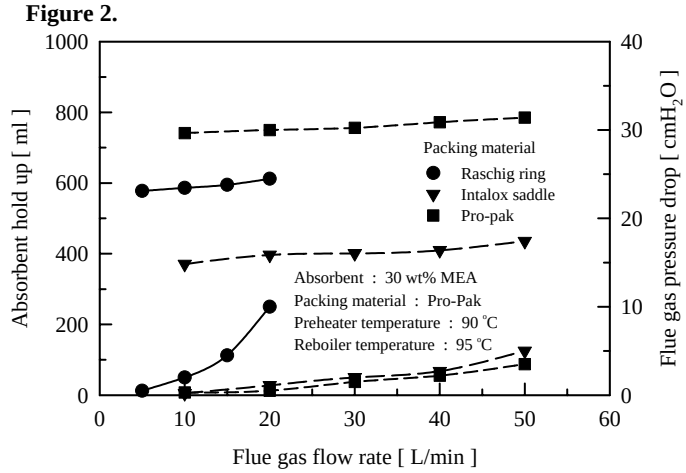

Figure 2. Operating hold-up and flue gas pressure drop of packing materials under different flue gas flow rate.

The absorption of CO_2 in absorbent is directly related to the contact time of flue gas and absorbent. Longer contact time means larger operating hold-up and closely related to specific surface area of packing material. Flow rates of flue gas and absorbent also important factor for CO_2 absorption under specific packing material. In view of gas-liquid contact time, flue gas flow rate should be inversely proportional to absorbent flow rate to keep constant gas-liquid contact time. Therefore, both flow rates should be adjusted to prevent absorbent flooding. Flooding happens when the gas flow rate is so high that absorbent can not flow down and it is related to void fraction of packing material. The experiment results presented in **Figure 1** showed that Pro-Pak has highest operating hold-up and lowest flue gas pressure drop. When compared with other packing materials used in this experiment, it can be expected that Pro-Pak would show highest CO_2 absorption.

As already mentioned, flue gas flow rate is also one of important factors for gas-liquid contact and CO_2 absorption. CO_2 removal efficiencies under different flue gas flow rate and packing materials were shown in **Figure 3**. Absorbent flow rate is 1.0L/min and flue gas flow rate was controlled to prevent flooding.

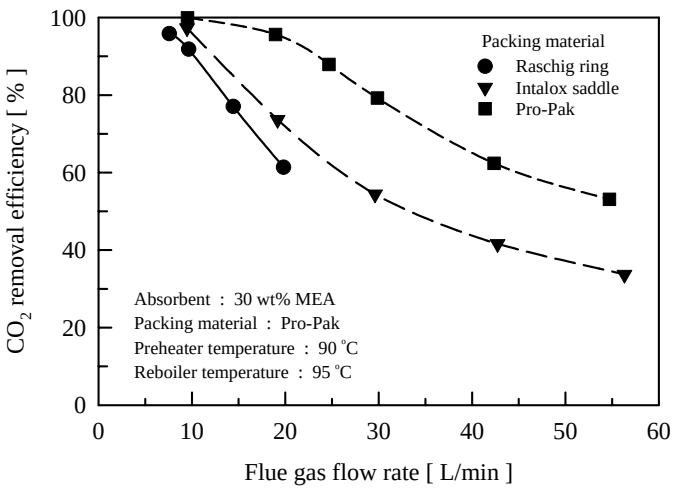

Figure 3. CO_2 removal efficiencies under different flue gas flow rates and packing material.

As expected, CO_2 removal efficiencies using Pro-Pak presented in **Figure 3** showed highest value entire range of flue gas flow rates. It means that CO_2 absorption is proportional to specific surface area of packing material and gas-liquid contact time. Higher flue gas flow rate under constant absorbent flow rate means shorter gas-liquid contact time and lower CO_2 absorption. It is also consistent with already mentioned expectation.

CO_2 absorption has close relation to gas-liquid contact time and the effect of packing material and flue gas flow rate on CO2 absorption were shown in **Figure 2** and **3**. Another factor affecting gas-liquid contact time is absorbent flow rate. As already mentioned, flooding happens when flue gas flow rate is too high absorbent to flow down and the operation of absorption process is failed.

The effects of absorbent flow rate on CO_2 removal efficiencies were observed under different flue gas flow rate and presented in **Figure 4**. L/G ratio is defined as the ratio of absorbent mole flow rate to flue gas mole flow rate. High L/G ratio means low flue gas flow rate under constant absorbent flow rate and much CO_2 absorption. As shown in **Figure 4**, 18-38 kg-mole absorbent/kg-mole flue gas of L/G ratio was required to achieve over 90% CO_2 removal efficiency under this experimental condition. The design of CO_2 absorption process is based on gas-liquid contact time and optimum low rates of flue gas and absorbent to achieve specific CO_2 removal efficiency are could be used for this purpose.

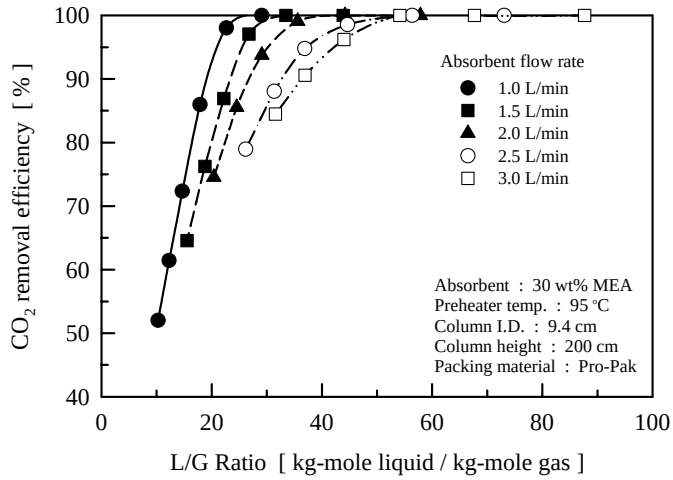

Figure 4. CO_2 removal efficiencies under different L/G ratio.

Conclusions

In this study, Pro-Pak showed highest CO_2 removal efficiency. It means that specific surface area affecting operating hold-up and void fraction affecting flue gas pressure drop are important physical properties for the selection of packing material. The design basis of CO_2 absorption process is gas-liquid contact time needed to achieve specific CO_2 removal efficiency. For the determination of desired gas-liquid contact time, CO_2 removal efficiencies were calculated under different flow rates of flue gas and absorbent. 18-38 kg-mole absorbent/kg-mole flue gas of L/G ratio was needed to achieve over 90% of CO_2 removal efficiency under experimental condition.

In addition to data showed in this study, experiments under various packing material, column type, absorbent type and operating conditions were performed and dynamic properties such as flue gas mean residence time, superficial velocity and overall mass transfer coefficient were calculated but did not show in this study.

The experimental results can be used as basic data for scale up of CO_2 absorption process and experimental apparatus can be used for durability test of absorbent.

Acknowledgment

This work was supported by Ministry of Commerce, Industry and Energy, Korean government.

References

1. Sheng H. Lin, Ching T. Shyu, Waste Management, **1999,** 19, 255-262.
2. T. Mimura, T. Suda, I. Iwaki, A. Honda, H. Kmazawa, Chem. Eng. Comm. **1998**, 170, 245-260.
3. Sartori G., Savage D. W., Ind. Eng. Chem. Fundam., **1983**, 22, 239-249
4. Paiton T., Ener. Conser. Manage., **1996**, 37, 935-940.
5. M.E. Edwards, Chemical Engineer's Hand Book, 6th edn., McGraw Hill, NewYork, 1984.
6. K. R. Rao, Can. J. Chem. Eng., **1993**, 71, 685.