FTIR studies of acetylacetonates in supercritical CO_2 using a novel capillary cell: high pressure on a low budget

Matthew C. Henry, Clement R. Yonker

Battelle Pacific Northwest National Laboratory
P.O. Box 999
MS P8-19
Richland WA 99352

Introduction

One of the advantages of using supercritical carbon dioxide as an industrial solvent is the fact that its solvating power may be "tuned" by changing the pressure and temperature. Current spectroscopic techniques are able to explore a wide range of temperatures in SC CO_2, but the pressures that can be explored in conventional high-pressure spectrophotometer cells are typically limited to less than 1 kbar. Yonker and co-workers have reported using fused silica capillary cells in NMR to study pressures up to 5 kbar.[1] In this work, we extend the use of fused silica capillaries to Fourier-transform infrared (FTIR) spectroscopy.

Typical high-pressure IR cells are expensive and difficult to clean. Capillary cells are quite inexpensive (the price of a typical high-pressure cell could buy a sufficient length of capillary to make a thousand capillary cells). The low price allows studies in chemical systems too corrosive for conventional cells. Capillary cleaning is not an issue, since the cells are disposable.

The β-diketone 1,4 pentanedione (AcAc) and its trfiluoro (TFA) and hexafluoro (HFA) analogs shown in Figure 1 are commonly used chelating agents for solubilizing metal ions in supercritical CO_2. Supercritical CO_2 containing fluorinated acetylacetonate has been used for metal ion extraction.[2] The acetylacetonates are interesting because they exist in tautomeric equilibrium between keto and enol forms. The formation of an enolate anion is an intermediate step in the chelation of metal cations.[3] The equilibrium between keto and enol forms is of interest in predicting the chelating ability of acetylacetonates dissolved in SC CO_2.

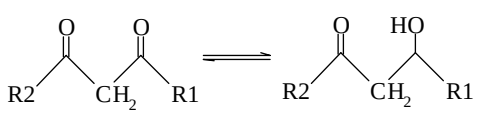

AcAc:R1=R2=CH_3
TFA: R1=CH_3, R2=CF_3
HFA: R1=R2=CF_3

Figure 1. The acetylacetonates used in this study

The enol form of the tautomer is favored by increasing fluorination (HFA>TFA>AcAc) and disfavored by increasing temperature.[1] The role of pressure in shifting the tautomeric equilibrium is uncertain. At low total pressures, the keto form was reported to be favored as pressure was increased.[4] Previous NMR studies show no detectable change in equilibrium with increased pressure.[1]

The pressure dependence of the equilibrium can be related to the change in partial molar volume between the keto and enol forms. The equilibrium constant K_{eq} is given by equation 1

$$K_{eq} = \frac{[enol]}{[keto]} \qquad \text{Eq. 1}$$

The equilibrium constant can be related to the partial molar volume by

$$\frac{\delta \ln K_{eq}}{\delta P} = \frac{-\Delta V}{RT} \qquad \text{Eq. 2}$$

where R is the ideal gas constant, T is the absolute temperature, and P is the pressure.

In this work we will focus on using the capillary cell to obtain information about the pressure equilibrium between the keto and enol forms of AcAc, since it is the prototype of this class of compounds and some literature values are available for lower pressures.

Experimental

Reagents. Acetylacetone was used as received from Aldrich. The carbon dioxide used was SFC grade (Scott Specialty Gases, Plumsteadville, PA).

Instrumentation. The experimental apparatus is shown in Figure 2. All tubing is 1/16-inch stainless steel. All valves and fittings between the CO_2 tank and V 3 are rated to 1.0 kbar, and all fittings after V3 are rated to 4.13 kbar. Valves and fittings were obtained from High Pressure Equipment Inc. (Erie, PA). Pressure was controlled using two syringe pumps. Pump SP1 was an Isco 260D syringe pump (Isco, Inc. Lincoln, NE) while pump SP2 was a High Pressure Equipment 10 cm^3 pressure generator. The pumps were operated in two stages to generate pressures up to 3.1 kbar. The system was pressurized using SP1 until the pressure reached the operation limit of 517 bar. Valve V2 was then closed and the system further pressurized using pump SP2. System pressure was monitored using pressure transducers PX1 and PX2.

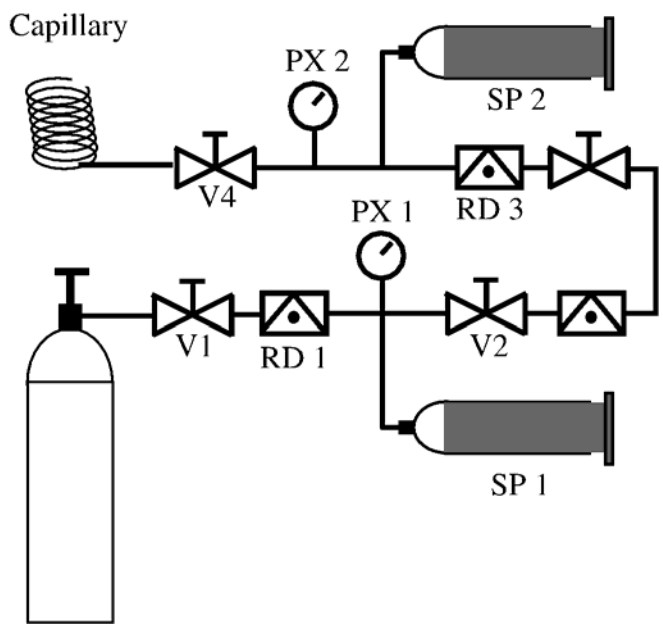

Figure 2. Experimental apparatus. V1-4: Valves, SP1-2 syringe pumps, RD1-3 rupture disks, PX1-2 pressure transducers.

Although the volume of CO_2 contained in the capillary represents a negligible hazard even at 3.1 kbar, the valves and piping contain enough CO_2 to present a safety hazard. All closed spaces within the experimental system are protected by appropriately sized rupture disks to prevent uncontrolled ruptures from occurring. Rupture disks RD1 and RD2 are rated to 586 bar, while RD 3 is rated to 4.0 kbar.

The sample cell used is a 1m length of 355µm OD, 103µ ID polyamide-coated fused silica capillary (Polymicro Technology, Pheonix, AZ). One end of the capillary was flame sealed using a jewelers torch. The exposed fused silica was coated with cyanoacrylate adhesive to protect it from damage. A 0.5-cm window was burned in the polyimide coating approximately 7 cm from the sealed end of the capillary and cleaned using isopropanol. The open end of the capillary was fitted into a Vespel ferrule (Alltech) and glued in place using cyanoacrylate adhesive. All capillary failures during experiments resulted from failures at the ferrule, rather than failure of the capillary itself. Best results were obtained when the adhesive on the ferrule was allowed to harden while the ferrule was compressed in the steel fitting.

The capillary was inserted into an aluminum heating-block and mounted on the microscope stage. The heating block was equipped with two 50W-cartridge heaters and two RTD temperature sensors. Temperature was maintained within 0.75°C by a temperature controller (Watlow; Winona, MN). The temperature can be adjusted between ambient temperature and 270 °C.

FTIR spectra were recorded on a Bruker IFS-66 spectrophotometer using and IRScope-I FTIR microscope equipped with a cryogenically cooled MCT detector. Data processing was carried out using the Bruker OPUS 3.2 software.

All spectra are the average of 1024 scans. The IR scope was equipped with a 34X, 0.4 NA IR lens and a 0.75mm aperture, producing an observed spot size of 50µm. The appropriate spot size was determined by acquiring blank spectra of a capillary containing only CO_2 with successively smaller apertures until a flat baseline was achieved. Too large an aperture produces artifacts due to focussing of the IR beam by the capillary.

Samples were loaded into the capillary using a vacuum fill technique. The open end of the capillary was inserted through a rubber septum into a sample vial containing the acetylacetonate. The open end of the capillary was held below the level of the liquid, while a syringe needle was inserted into the air space above the sample. The needle was withdrawn to create a slight negative pressure within the sample container. This negative pressure was maintained until enough air had been expelled from the capillary to allow the sample to fill a section of the capillary when the vacuum was released.

Results and Discussion

Representative spectra of CO_2, AcAc, and solutions of AcAc in CO_2 are shown in Figure 3. The fused silica capillary has a useable window in the mid-IR between 2000 and 4000 cm^{-1}, with some information available down to 1000 cm^{-1}. The region between 2000 and 4000 cm^{-1} includes the OH and CH stretch bands of the AcAc spectrum, along with the $\nu_1+\nu_3$ and $2\nu_2+\nu_1$ combination bands of the CO_2.

Figures 4A and 4B show the difference spectrum of AcAc in CO_2 (4A) and neat liquid AcAc (4B) at 33°C. Spectra were recorded as the pressure was varied between 0.1 and 3.1 kbar in increments of 35 bar between 0.1 and 0.35 kbar and in increments of 350 bar between 0.35 kbar and 3.1 kbar. As the pressure is increased, there is a decrease in intensity of the CH_2 (AS) band with concomitant increases in the intensity of CH and OH stretches associated with the enol form.

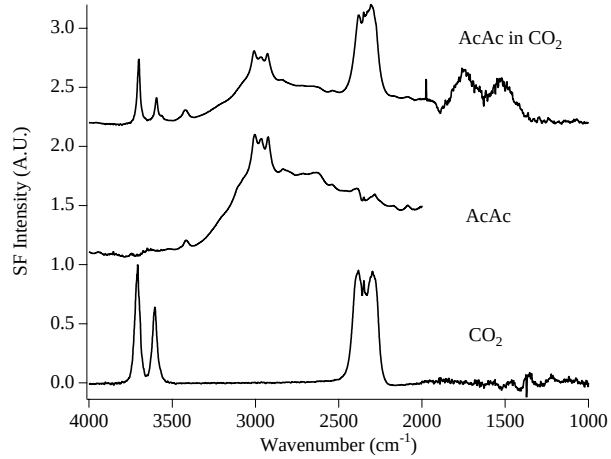

Figure 3. Representative spectra of CO_2, liquid AcAc, and liquid AcAc in CO_2. Spectra have been normalized and offset for clarity.

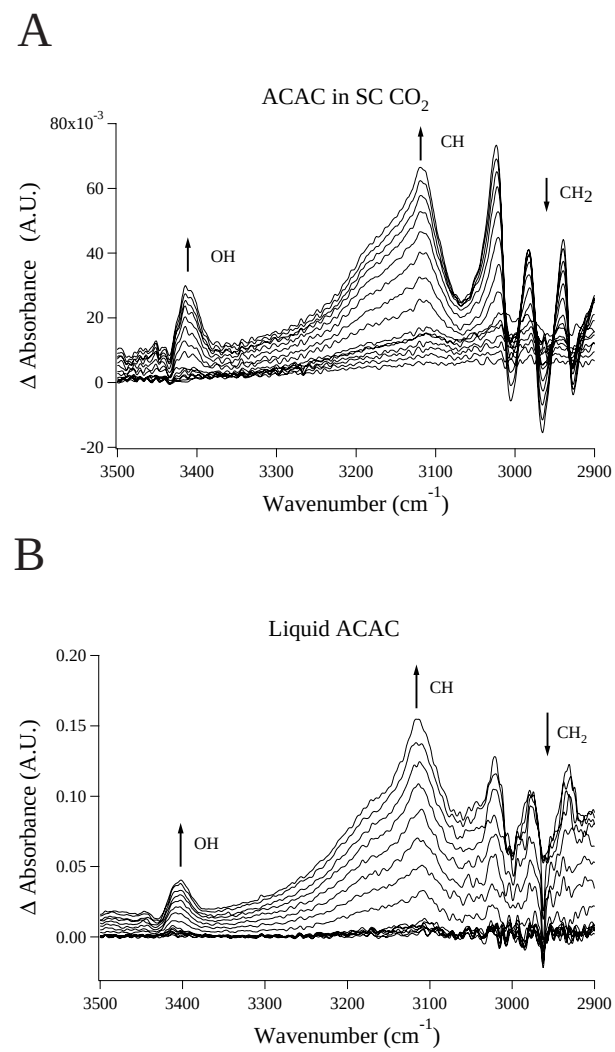

Figure 4. Difference spectra of AcAc in CO_2 (A) and neat liquid AcAc (B) at pressures between 0.1 and 3.1 kbar.

Figures 5A and 5B show the natural log of the ratio of OH to CH_2 peak areas. This ratio is proportional to K_{eq} as shown in Eq. 1. plotted as a function of pressure. The slope of this plot is proportional to the change in partial molar volume between the keto and enol forms of AcAc.

The ΔV value obtained for subcritical CO_2 is -10.88 ± 1.5 cm^3/mol. For supercritical CO_2 at 33°C and 66°C the values are -13.57 ±1.1 cm^3/mol and -15.99 ±1.4 cm^3/mol respectively. For neat liquid AcAc at 66 °C the value was -3.57 ± 0.1. This value is slightly lower than those previously reported for AcAc by Jouanne and Heidberg (-4.7 ± 0.7 for liquid AcAc at 62°C) at lower pressures by NMR.[4] The larger ΔV values obtained in sub- and supercritical CO_2 may indicate that intermolecular hydrogen bonding between molecules in the enol form results the formation of dimer and trimer species. Partial molar-volume values were not obtained for pure AcAc at lower temperatures because the AcAc was observed to freeze in the capillary at high pressure. The pressure-freezing behavior was only observed for the neat liquid samples.

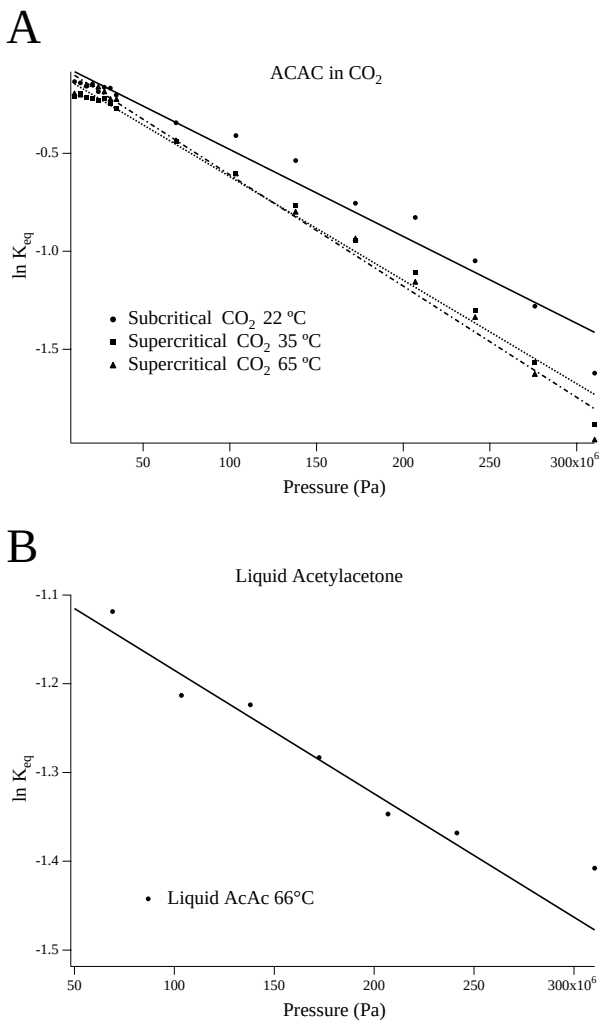

Figure 5. Equilibrium constant K_{eq} plotted as a function of pressure for AcAc in CO_2 (A) and for neat liquid AcAc (B)

Conclusions

We have demonstrated high pressure FTIR spectroscopy in a novel capillary cell. The cell allows acquisition of spectra at pressures of at least 3.1 kbar, significantly higher than the pressures accessible using conventional high-pressure IR cells. This cell has the potential to allow safe, low cost FTIR studies of a variety of industrially relevant processes in SC CO_2.

The capillary cell was used to study the pressure-dependent keto-enol equilibrium of acetylacetone, an important chelating agent for metals in SC CO_2. High pressure was found to increase the content of the enol form in the mixture. This implies that high pressures may be preferred for metal extractions using SC CO_2.

Partial molar volumes were calculated for AcAc as a neat liquid in sub- and supercritical CO_2. The partial molar-volume change between the keto and enol forms was smallest for the neat liquid, larger for subcritical CO_2, and largest for supercritical CO_2. This may suggest that intermolecular hydrogen bonding between enol forms occurs in SC CO_2.

Acknowledgement. Work at the Pacific Northwest National Laboratory (PnP) was supported by the Office of Science, Office of Basic Energy Sciences, Chemical Sciences Division of the US Department of Energy, under Contract DE-AC076RLO 1830

References

(1) Wallen, S. L.; Yonker, C. R.; Phelps, C. L.; Wai, C. M. *J. Chem. Soc., Faraday Trans.* **1997**, *93*, 2391-2394.
(2) Laintz, K. E.; Wai, C. M.; Yonker, C. R.; Smith, R. D. *Anal. Chem.* **1992**, *64*, 2875.
(3) Lin, Y.; Wai, C. M. *Anal. Chem.* **1994**, *64*, 311.
(4) Von Jouanne, J.; Heidberg, J. *J. Mag. Res* **1972**, *7*, 1-4.