A RELIABLE METHOD FOR THE DETERMINATION OF HYDROGEN STORAGE CAPACITY AT HIGH PRESSURE AND ITS APPLICATION TO CARBON MATERIALS

James M. Blackman, John W. Patrick, Colin E. Snape

Nottingham Fuel & Energy Centre,
School of Chemical, Environmental and Mining Engineering (SChEME), University of Nottingham, University Park, Nottingham NG7 2RD, United Kingdom,
enxjmb@nottingham.ac.uk

Introduction

In recent years, activated carbons, carbon nanofibers and carbon nanotubes have all attracted considerable attention as potential hydrogen storage materials.[1-3] However, determining the hydrogen storage capacity of these materials at high pressure (>10 MPa) has been found to be problematic due to difficulties with reliability and obtaining a satisfactory degree of accuracy.

Primarily, there are two methods that are applied to directly study hydrogen storage capacity of solid materials at high pressures, gravimetric and volumetric. The gravimetric method determines the hydrogen storage capacity of a material by measuring the change of weight of a sample during an adsorption-desorption cycle. The experiments are carried out with *ca* 10 mg of sample in custom built thermo-gravimetric apparatus, which have a high pressure balance chamber.[4] However, this technique is sensitive to all gases sorbed as in principle, it is only based on weighing and this problem is magnified by the very small sample size used for each experiment so is best suited to materials that have high hydrogen storage capacities.

The volumetric method determines the hydrogen storage capacity of a material by measuring the pressure drop resulting from adsorption after exposing the sample to hydrogen at constant volume. This method has the advantage that the conditions are similar to that of a storage tank. Most of the work reported using this method has been carried out using direct pressure measurement in customer built rigs based on the Sieverts type apparatus which is used to determine the hydrogen storage capacity of metal hydrides.[5] However, at high pressures, the Sieverts type apparatus is very sensitive to temperature instability, leaks and additional pressure effects caused by expanding the hydrogen from the reservoir to the sample cell. Recently a second volumetric method has been introduced using a differential pressure method in an attempt to minimise many of these problems.[6]

The difficult nature of the determination of hydrogen storage capacity of a material has contributed to the inconsistencies that have arisen in this field. The reported values for hydrogen storage capacity for carbon materials range from <0.1 wt% for activated carbons, graphite, nanofibers and nanotubes to ~65 wt% for carbon nanofibers.[7,8]

Recognising the difficulties encountered in measuring the adsorption of hydrogen at high pressure, a volumetric differential pressure method has been developed to improve the accuracy of the determination of the hydrogen storage capacity of carbon materials at pressures of *ca*. 10 MPa to a limit of detection of 0.1 wt%. This method has been applied to a series of carbon nanofibers and activated carbons and their adsorption characteristics have been compared.

Experimental

Materials The carbon nanofibers were prepared by carbon vapor deposition from a series of copper-nickel catalysts using ethylene-hydrogen (1:4) as the reactive gas.

The catalyst precursors were prepared by co-precipitation from stoichiometric aqueous solutions of nickel nitrate hexahydrate and iron nitrate nonahydrate using sodium hydroxide solution as the base. Sodium hydroxide was selected over weaker bases used previously to give better definition on precipitation. The resulting suspension was then filtered and the precipitate dried at 107 °C for 24 hours. The product was then calcined at 400 °C for 4 hours to afford the mixed metal oxide catalyst precursor. The catalyst precursor was then finely ground and 50 mg placed in a horizontal quartz reactor tube and reduced for 16 hours under a hydrogen gas flow (100 ml/min) at 450 °C. The reactor then was heated to 600 °C under inert atmosphere. The ethylene-hydrogen (60:240 ml/min) reaction gas was passed over the catalyst for 3 hours. The resulting nanofibers were cooled to room temperature under an inert atmosphere. The carbon nanofibers received no further treatment before adsorption analysis.

The activated carbons used are commercially available and were used with no further treatment.

Adsorption Analysis The nitrogen BET surface area measurements were carried out on an ASAP 2010 and the hydrogen adsorption measurements were made on a custom built volumetric differential pressure apparatus (Figure 1).

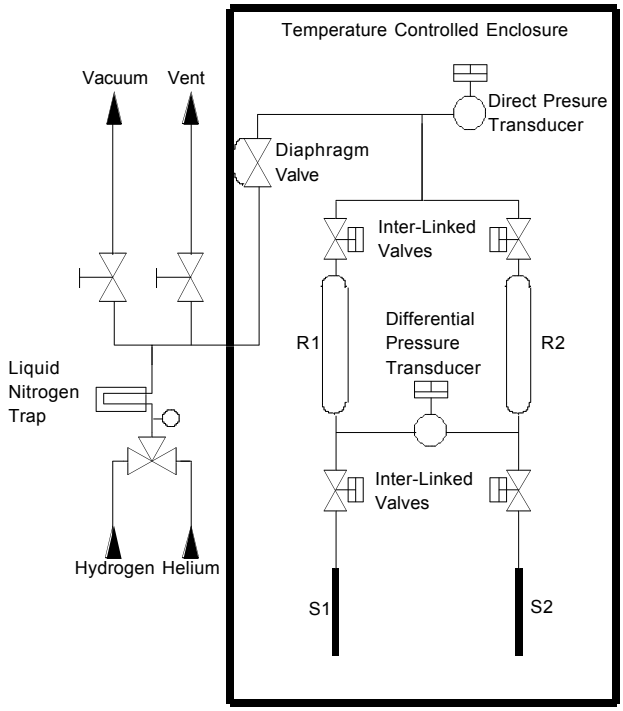

R1 and R2 are reservoir 1 and 2 respectively
S1 and S2 are sample cell 1 and 2 respectively

Figure 1. Schematic of the volumetric differential pressure hydrogen adsorption apparatus

The limb R1+S1 is symmetrical to the limb R2+S2 and the differential pressure transducer has a ±5 bar operational range so that both S1 and S2 can be used as the sample cell. The following protocol is used to operate the apparatus. Using S1 as the sample cell and S2 as the blank, the sample (1-2.5 g) is loaded into S1 and sealed to the apparatus by a high pressure o-ring fitting. The free space in S1+R1 is then determined by helium free space analysis using the differential pressure cell relative to vacuum. The whole apparatus is then evacuated to 0.2 Pa and S1 heated to

150 °C for 2 hours. The heating to S1 is then switched off and the enclosure is then allowed to equilibrate at the operating temperature of 30 °C. The lower inter-linked valves (air-actuated high pressure bellows valves) are then closed. Helium is then admitted to the desired pre-expansion pressure. The top interlinked valves are then closed isolating the limbs and the apparatus isolated by closing the diaphragm valves. The experiment then commences by opening the lower inter-linked valves. After 7 hours the experiment is stopped. The experimental procedures are then repeated using hydrogen.

Results and Discussion

Apparatus The volumetric differential pressure hydrogen adsorption setup has several advantages over the more traditional Sieverts apparatus. Differential pressure transducers have much higher accuracy than direct pressure transducers and by applying the equation of state equation the hydrogen adsorption capacity can be calculated solely using the differential pressure measurement.

$$A = \frac{\Delta PVM_H}{50RTm_C} \quad (1)$$

A=Hydrogen adsorbed (wt%)
M_H=Relative atomic mass of hydrogen
m_c=Mass of sample

The differential pressure system also helps to minimise the errors resulting from minor temperature fluctuations (*ca* ±0.1 °C) of the equipment as R1+S1 and R2+S2 are affected by the same conditions. To prove this, the apparatus was pressurised to 100 bar and both the differential pressure gauge and direct pressure gauge were monitored (Figure 2). The direct pressure reading fluctuated systematically and correlated with the minor temperature changes but the differential pressure reading remained level throughout.

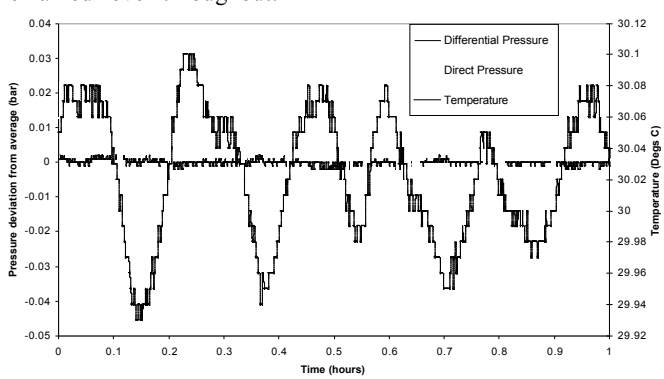

Figure 2. The effect of minor changes in temperature on differential pressure and direct pressure recorded on the volumetric differential pressure hydrogen adsorption apparatus at 10 MPa

The helium run prior to the hydrogen adsorption run acts as a leak detection test. After three hours, all disturbances caused by the expansion of the R1 and R2 into S1 and S2 respectively have returned to equilibrium, so any change in pressure can only be the result of a leak. The helium run is also used as a baseline correction for the hydrogen adsorption run. The initial expansion causes gas at over 11 Mpa to be expanded through a tiny port to a vessel initially at vacuum. This is believed to have a cooling effect on the gas in both limbs, which is dominant in the blank limb as the blank sample cell has more void space to be filled. The result is the pressure is slightly reduced on the blank limb side relative to the sample limb, which is corrected quickly as the apparatus returns the gas to equilibrium pressure. Therefore, the baseline correction is required to give the differential pressure reading an adsorption free reference point; reducing error caused temperature expansion effects and other non-adsorption related phenomena. Without the correction an exaggerated hydrogen adsorption measurement can be observed with and inaccurate profile recorded (Figure 3). This result exaggeration becomes more pronounced with poorer hydrogen adsorbents as the cooling effect becomes increasingly dominant over the adsorption. The true adsorption profile is also lost if a correction is not carried out.

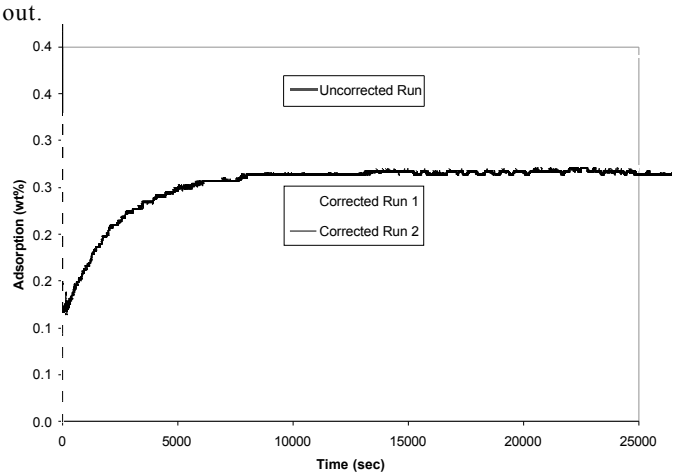

Figure 3. Hydrogen adsorption profile at 10 MPa of carbon nanofibers grown from Cu-Fe-Ni (5:85:10) showing measurement reliability and the error observed if the run is not baseline corrected

The apparatus is guarded from slow leaking through the valves by using low leak rate valves and a pressure buffer between the top inter-linked valves and the diaphragm valve, which is maintained at 5 bar above the operating pressure. The use of 1-2.5 g of sample for a run also enhances the sensitivity of the apparatus, as this is larger than most previous measurements made, which tend to use below 1 g, this ensures that the measurement taken is representative of the sample. The repeatability of the measurements made on volumetric differential pressure hydrogen adsorption apparatus has been found to be excellent. This can clearly be seen for the corrected run 1 & 2 for carbon nanofibers grown from Cu-Fe-Ni (5:85:10).

Adsorption on Carbons As stated a series of activated carbons and carbon nanofibers were analysed for BET nitrogen surface area. The carbon nanofibers were also analysed by XRD and confirm their graphitic nature.

Carbon Nanofibers	Activated Carbons
Fe-Ni (1:9)	Fisher FDC
Fe-Ni (2:8)	Fisher Charcoal FGA
Fe-Ni (3:7)	Norit FGD
Fe-Ni (4:6)	Speakman
Fe-Ni (5:5)	1526-r-98
Fe-Ni (6:4)	1523-r-98
Fe-Ni (7:3)	
Cu-Fe-Ni (5:85:10)	

Table 1. Carbons used for adsorption experiments

The activated carbons analysed were observed to adsorbed 90+ % of their hydrogen adsorption capacity instantly. This is consistent with physisorption being the dominant mechanism of adsorption.

The carbon nanofibers prepared from bi-metallic catalysts were found to have a much lower adsorption capacity than the activated carbons. The carbon nanofibers were observed to adsorb 50-70 % instantly which is assumed to result from physisorption on the surface of the nanofibers. The remainder of the adsorption occurs on a timescale of *ca* 60 minutes, which is thought to result from the hydrogen penetrating between the graphite layers of the carbon nanofibers.

Most of the carbons studied followed the basic trend of their nitrogen BET surface area showing a broadly linear relationship with their final hydrogen adsorption capacity (Figure 4). However, carbon nanofibers grown from a Cu-Fe-Ni (5:85:10) were observed to adsorb more hydrogen than would be expected relative to the recorded nitrogen BET surface area measurement (circled in Figure 4). This may be the result of hydrogen penetration of the graphitic layers which is inaccessible to nitrogen.

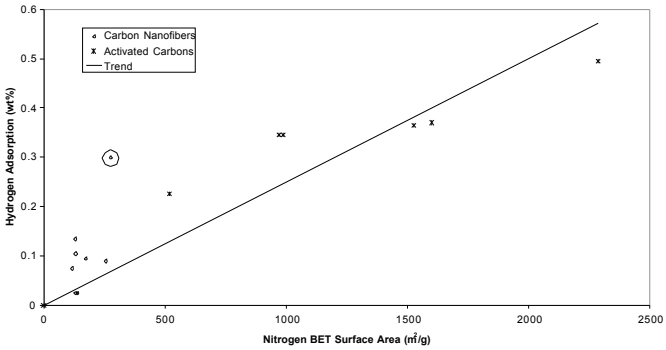

Figure 4. Graph outlining the relation ship between final hydrogen adsorption capacity at 10 MPa of the carbon and the corresponding nitrogen BET surface area values

Conclusions

The volumetric differential pressure hydrogen adsorption apparatus developed has been shown to be reliable and accurate method for determining the hydrogen adsorption capacity of a material to 0.1 wt%. The carbons studied displayed a broadly linear correlation between their hydrogen adsorption capacity and nitrogen BET surface area. However, certain carbon nanofibers did deviate from this trend to be favorable towards hydrogen. If carbon nanofibers do have the potential to adsorb large amounts of hydrogen it would appear that their structure is critical.

Acknowledgement The work was supported by Air Products and Chemicals, Inc. and the EPSRC research council. We gratefully acknowledge the technical advice from Dr. G. Pez (Air Products and Chemicals, Inc.), Mr. F. Anderton and Mr. M. Fletcher and the XRD analysis carried out by Mr. D. A. Clift.

References

(1) Cheng, H. M.; Yang, Q. H.; Liu, C. *Carbon* **2001**, *39*, 1447-1454.
(2) Zuttel, A.; Sudan, P.; Mauron, P.; Kiyobayashi, T.; Emmenegger, C.; Schlapbach, L. *Int. J. Hydrog. Energy* **2002**, *27*, 203-212.
(3) Darkrim, F. L.; Malbrunot, P.; Tartaglia, G. P. *Int. J. Hydrog. Energy* **2002**, *27*, 193-202.
(4) Strobel, R.; Jorissen, L.; Schliermann, T.; Trapp, V.; Schutz, W.; Bohmhammel, K.; Wolf, G.; Garche, J. *J. Power Sources* **1999**, *84*, 221-224.
(5) Fan, Y. Y.; Liao, B.; Liu, M.; Wei, Y. L.; Lu, M. Q.; Cheng, H. M. *Carbon* **1999**, *37*, 1649-1652.
(6) Browning, D. J.; Gerrard, M. L.; Lakeman, J. B.; Mellor, I. M.; Mortimer, R. J.; Turpin, M. C. *Nano Lett.* **2002**, *2*, 201-205.
(7) Tibbetts, G. G.; Meisner, G. P.; Olk, C. H. *Carbon* **2001**, *39*, 2291-2301.
(8) Chambers, A.; Park, C.; Baker, R. T. K.; Rodriguez, N. M. *J. Phys. Chem. B* **1998**, *102*, 4253-4256.