EVALUATIONS OF A NOVEL SAMPLE CONDITIONING SYSTEM FOR THE CONTINUOUS REAL-TIME MONITORING OF MERCURY IN FLUE GAS FROM COAL-FIRED UTILITY BOILERS

Kevin Fisher, Scott McLaren, Trevor Ley, Rick Slye

Apogee Scientific, Inc.
2895 W. Oxford Ave, Suite 1 Englewood, CO 80110

Introduction

Mercury (Hg) from combustion sources is recognized as a major concern to the nations air quality. In December 2000, EPA announced that it would regulate mercury emissions from coal-fired boilers under Title III of the Clean Air Act Amendments of 1990. A key aspect of achieving and assuring compliance is the ability to accurately measure mercury at a regular interval. The optimal solution is a continuous emissions monitor for mercury that could be operated and maintained in a similar manner as already done with SO_2 and NO_x CEMs at utilities. Although a few mercury analyzers show promise for measuring elemental mercury, a reliable sampling system that will allow these analyzers to measure total (particulate plus vapor) and speciated mercury continuously in the flue gas of coal-fired utility boilers has not been demonstrated and recent development efforts are still in the early stages.

Real-time continuous monitoring of mercury in flue gas is essential for several reasons. Control of Hg emissions from coal-fired utility boilers is currently being considered, and if implemented will likely cost billions of dollars each year (i). Most of the Hg control strategies being proposed for coal-fired utility boiler flue gas include some type of sorbent injection. Prior to installing a control system, more accurate measurements of Hg emissions would allow EPA and the utility to make more informed decisions concerning their needs and control options. Real-time continuous monitoring of Hg would provide options for advanced process control feed-back as well as for monitoring the performance of the control system, thus minimizing sorbent usage and lowering the cost of controls. Other applications of this technology include Hg emission monitoring from other sources, such as municipal waste incinerators, commercial/industrial boilers, medical waste incinerators, and crematories.

In a effort to advance the art of mercury measurements, Apogee was awarded a Phase I and II Small Business Innovative Research Grant (SBIR) from EPA and additional funds from the Electric Power Research Institute (EPRI) to develop a prototype Sample Conditioning System (SCS) that, in conjunction with currently available analyzers (e.g., cold vapor atomic absorption spectrometers (CVAAS), cold vapor atomic fluorescence spectrometers (CVAAFS)), will enable real-time monitoring of total vapor-phase mercury (TVM), elemental mercury (EM), and oxidized mercury (OM) as well as total mercury (TM), consisting of particulate mercury (PM) and TVM.

The overall goal of this program is to define a new state-of-the-art mercury measurement system by developing a novel "front-end" conditioning system for the continuous real-time monitoring of mercury in flue gas from coal-fired utilities. The SCS will provide a method to use an analyzer such as CVAAS or CVAFS to measure TVM, EM, and TM.

Great River Energy (GRE), PSEG Fossil, LLC, WE Energies and Xcel Energy offered their support and one of their facilities as test sites. Field evaluations of the SCS were conducted at the three test locations to demonstrate the mercury SCS at plants firing low-chlorine North Dakota lignite, a high-chlorine low-sulfur eastern bituminous coal, and a Powered River Basin (PRB) coal. The complete system was evaluated at the low-chlorine coal site (Site 1) using procedures described in the EPA PS-12. Testing included calibration zero and drift checks over a seven-day period, calibration error evaluations, and relative accuracy test using the Draft Ontario Hydro method as the reference method. Long-term evaluations at the high-chlorine coal site (Site 2) and the PRB site (Site 3) have been concluded. A month-long evaluation of the system is currently underway at a PRB site (Site 4). Data from this evaluation will be presented at the conference.

Experimental

Sample Conditioning System

There are around a dozen commercially available Hg CEMs and all have their pros and cons. The real challenging part of any system is the sample conditioning portion or also called the front-end. Challenges include: fly ash interactions with the Hg in the flue gas, adsorption and absorption, obtaining a TM concentration, which includes particulate phase, and obtaining a particulate free gas stream with minimal maintenance.

The SCS, as shown in Figure 1, will provide a method to use an analyzer such as a CVAAS, Zeeman, or CVAFS to measure TVM, EM and TM. The vapor-phase portion of the system is a dual pass design, where TVM passes through one line and the elemental fraction through the second line. Particulate is removed from a common sampling probe and the flow is split to the two lines. All components in the two lines are identical except that soluble OM is removed from the sample gas stream upstream of other components in the first line. In both lines, the gas stream then passes through a catalyst to convert mercury to the elemental form. The gas is then conditioned to remove possible interfering gases and stabilize the EM prior to transport to an analyzer for measurement. In the system, sample conditioning takes place at the stack and only EM is being conveyed from the stack to the analyzer. Thus, problems related to reactivity and surface losses are minimized. For TM, a slipstream of flue gas is isokinetically extracted and heated to thermally desorb mercury from the fly ash. The effluent is then filtered and passed through a second TVM SCS line for measurement.

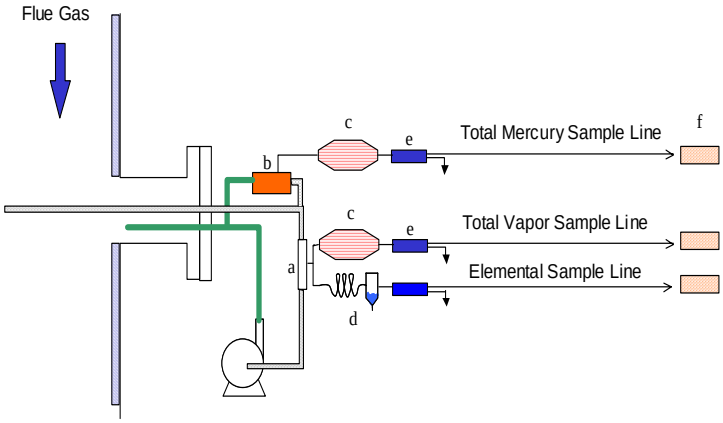

Figure 1. SCS arrangement for simultaneous measurement of TM, TVM, and EM.

Evaluation Methods

During field evaluations at the low-chlorine coal site, the performance specification test procedure identified in EPA's Draft

Performance Specification (PS-12) (see Table 1) was followed.

Apogee utilized two techniques to calibrate the mercury analyzer during SCS operation. The primary technique was the batch injection method. For this technique, a precise volume of mercury vapor is drawn off a flask containing liquid elemental mercury using a glass/Teflon™ syringe. A temperature and pressure measurement was taken before each sample drawn. When continuous concentrations of mercury are required, Apogee uses an elemental mercury permeation tube. If tests are conducted at a field site where the environmental conditions vary significantly, the mercury emitted from the permeation tube is referenced to the spike calibration technique. When a continuous concentration of OM was required for calibration, gas from the EM permeation tube was passed through a catalyst that converted 100% of the EM to OM. This technique simplifies calibration because the concentration of total mercury measured by the analyzer should remain unchanged regardless of the presence of the EM to OM conversion catalyst.

During the zero drift evaluation, no mercury was injected into the analyzer. A sample collection time of zero was set prior to evaluation. After the zero drift evaluation, a calculated amount of mercury vapor (approximately 50% of the duct concentration) was injected. Both the known concentration and the analyzer concentration were recorded. Other analyzer parameters were recorded as well to further evaluate analyzer performance. A second calibration concentration (approximately 100% of the duct concentration) was injected into the purge dry-gas line of the analyzer.

To confirm the measurements obtained with the SCS while on-site, a standard impinger based method was initially used. A reduction solution of stannous chloride in hydrochloric acid was used to convert OM to EM. The solution is mixed as prescribed in the draft Ontario Hydro Method for Manual Mercury Measurements. To measure speciated mercury, an impinger of potassium chloride (KCl) solution mixed as prescribed by the draft Ontario Hydro Method was used to capture oxidized mercury. Impinger solutions are continuously refreshed to assure continuous exposure of the gas to active chemicals.

Results and Discussion

Site 1 (Low-Chlorine Coal)

Apogee has completed field evaluations at one coal-fired utility that burns North Dakota Lignite coal, a low chlorine coal that produces a flue gas with primarily elemental mercury. The unit has two cold-side ESPs operating in parallel followed by a single scrubber. The test location was downstream of the ESP and upstream of the scrubber for a dry, low chlorine sample. The system was subjected to the EPA draft PS-12 and performed very well. Results from this site have been presented previously at numerous conferences.

Site 2 (High-Chlorine Coal)

Apogee has completed field evaluations at a coal-fired utility that burns a bituminous fuel; a high chlorine coal that produces a flue gas with primarily oxidized forms of mercury. The unit has two cold-side ESPs operating in parallel. The test location was downstream of the ESPs. The oxidized removal module performed very well at the site, however the total vapor mercury (TVM) module initially encountered some difficulties with the flue gas chemistry. The TVM module's initial performance was characterized by an initially stable mercury concentration that would begin to decay over time until finally no mercury was being transported to the analyzer at all. After investigation it was determined that vapor-phase selenium was being reduced to hydrogen selenide, which was reacting with the elemental mercury at the exit of the module. A gas stream additive was found which eliminated the problem. Evaluations were performed to verify the performance of the system with the selenium mitigation. The results were very good, despite the fact that the mitigation method had not been optimized. The TVM module was operated with an overboard calibration system to verify its performance. Data will be presented at the conference showing the performance of the TVM and also a discussion of the selenium-mitigation modification.

Site 3 (PRB)

A long-term evaluation of the TVM module has been concluded at a PRB utility at a test location downstream of a wet-venturi scrubber. This evaluation compares the performance of the TVM module with the standard wet chemical method. The performance of the system was very good and results agreed with those seen in the wet-chemical system very well. Data will be presented at the conference concerning this evaluation.

Site 4 (PRB)

A month-long evaluation of the TVM module is currently underway at an additional PRB fuel site. The test location is downstream of a cold-side ESP. No data is currently available; data from this evaluation will be presented at the conference.

Conclusions

It is possible to measure mercury in the flue gas from coal-fired boilers using mercury analyzers and current "wet chemistry" technologies, however theses techniques require significant care and attention by highly skilled personnel to achieve reasonable results. As of yet, this is not currently an option for meeting the emissions measurement needs beyond research applications. Several groups, including Apogee, are developing techniques to advance the way mercury measurements are taken. These techniques will require more field evaluations to assure that they are reliable in the majority of flue gas streams and able to be utilized over long periods.

Acknowledgements

Apogee would like to acknowledge the funding of EPA through an SBIR grant (Contract 68-D-01-060) and Project Manager James Gallup, EPRI's generous support and Project Manager Chuck Dene, and the support of Great River Energy, PSEG Fossil, and Xcel Energy.

References

1 Brown, Thomas, William O'Dowd, Robert Reuther and Dennis Smith. "Control of Mercury Emissions from Coal-Fired Power Plants: A Preliminary Cost Assessment." Presented at the DOE Conference on Air Quality: Mercury, Trace Elements, and Particulate Matter, December 1-4, 1998, McLean VA.

2 Sjostrom, Sharon, Trevor Ley, and Richard Slye, "Continuous Real-Time Monitoring of Mercury in Flue Gas from Coal-Fired Boilers: Field Experience." Presented at the Nineteenth Annual International Pittsburgh Coal Conference, September 23-27,2002.

3 Sjostrom, Sharon, Trevor Ley, "Development of a Sample Conditioning System for Reliable, Continuous Mercury Measurements in Coal-Fired Flue Gas." Presented at the Air Quality III Conference, September 11-12, 2002.