THE RELATIONSHIP OF THE ENERGY INPUTS TO THE NET ENERGY PRODUCTION OF FULLY INTEGRATED ENERGY-PRODUCING SYSTEMS

D. L. Klass

Institute of Gas Technology
Chicago, Illinois 60616

INTRODUCTION

The net energetics and the energy inputs into integrated,synthetic energy-producing systems are extremely important to the development of new energy supplies. Basically, the ultimate goal is to design and operate environmentally acceptable systems to produce new supplies of salable energy, whether they be low-Btu gas, substitute natural gas (SNG), synthetic crude oil, methanol, ethanol, hydrogen, or electric power from primary raw materials such as coal, oil shale, biomass, organic wastes, and isotopes, at the lowest possible cost and with the minimum consumption of energy inputs.

It is essential to quantify how much energy is expended and how much salable energy is produced in each fully integrated system. An energy budget should be prepared because the capital, operating, and salable energy cost projections, and the conversion process efficiency are insufficient alone to choose the best systems. These figures do not necessarily correlate with net energy production (1,2). Also, the "capital energy investment" consumed during construction of the system should be recovered during its operation. Comparative analyses of similar systems for the production of synthetic liquid and gaseous fuels from the same feedstock or of different systems that yield the same fuels from different raw materials should be performed by consideration of the economics *and* the net energetics. This approach to the selection of optimum systems is not limited to the production of substitute fossil fuels; synthetic energy systems per se such as nuclear power systems can also be treated in the same manner.

Recently, several reports have been published on the analysis of the net energetics of different systems, but there is by no means general agreement as to the conclusions of these studies. For example, for nuclear systems, Chapman states that if capacity grows too fast, the system will consume more energy than it produces (3), while Wright and Syrett state that the case for building nuclear power stations to conserve precious fossil fuel is overwhelmingly clear (4). Hoffman concluded that when all energy inputs are considered, such as mining uranium iron ore, enriching nuclear fuel, and fabricating and operating power plants and reprocessing facilities, the net electrical yield is very low (5). Yet, Davis stated that all the energy invested in a nuclear power plant during construction is repaid after only 2.3 months of full power operation (6).

Synfuel systems are not immune to these apparent contradictions either. For shale oil recovery, the net energy recovery (energy out/energy consumed) is reported to range from a ratio of 10 (Arco) to an energy standoff (Texaco), while the U.S. Federal Energy Administration wonders whether a mammoth shale oil operation would consume more energy than it yields (7,8). In contrast, coal gasification is stated to have a recovery ratio, at least for one system, of 5 (7). Conversion of biomass and wastes to synfuels appears to be characterized by relatively high energy recovery ratios (1,2,9).

An important factor that is often ignored in energy input-output analyses is that it is not essential for the energy consumed in the system to be less than the energy produced in the form of salable energy products. This depends on the quality of synfuel and the quality of the primary energy source as well as the quality of the external non-primary energy source inputs. Thus, oil shale cannot be utilized in the same manner as heating oil, which clearly has a higher intrinsic value than oil shale. So a synfuel production system that consumes more energy than it produces as salable synfuels may be acceptable and in fact necessary in some cases.

The analysis of net energetics can be performed using many different methods and a myriad of symbols and definitions. For example, some energy analysts feel that only an analysis based on the Second Law can provide the ultimate answers in terms of where more available energy, in the thermodynamic sense, can be found to permit true efficiency maximization.* Others believe that the conventional energy balance is optimal because it is more realistic and easier to use. Indeed, for integrated synfuel production systems, entropic losses may not always be definable for all segments of the system, and a rigorous Second-Law analysis cannot be performed. In the final analysis, it seems reasonable to assume that an integrated synfuel-production system is an isolated one into which primary and nonprimary energy inputs, suitably normalized with respect to quality, are injected, and salable energy products are withdrawn. After all, the energy products utilizable by the consumer correspond to the actual "available" energy.

The location of the system boundaries is of paramount importance in the net energy analysis of integrated synfuel production systems (10). It is probably desirable to transform the primary energy source, all materials used in building the system components, and all external energy inputs needed to operate the system, into their original sources in the ground. For example, the steel used in system construction consumed energy on fabrication and installation, yet its energy precursors also include proportional energy increments from steel production, the energy required to mine the iron ore, and the energy needed to manufacture the materials of construction for the iron ore mines and steel plants. The definition of system boundaries must also consider the nonadditive nature of different energy inputs by integrating them back to the original energy source, such as gasoline from crude oil and electricity from coal. Yet, coal and crude oil are not identical and the energies consumed by the system in terms of original energy sources in the ground are not strictly additive. The energy products of commercial systems will also not be single fuels, but will consist of several synfuels and salable by-products.

Obviously, the details of the system design and its boundaries, operating conditions, and constraints affect the net energetics, so it is difficult to compare the conclusions of different studies, especially when the ground rules are not the same (11). An analytical methodology derived independently of the type of synthetic energy system would be very useful if valid predictions could be made by application of the method to integrated systems. The purpose of this paper, therefore, is to present a simple theoretical approach to net energetics based upon principles rather than actual system examples. This analysis emphasizes the quantitative relationship of the external energy inputs to the net energetics of an energy-producing system. It is believed that the use of this concept *in conjunction with economic projections* will facilitate the comparative analysis of a broad range of systems and permit the selection of those systems that can add the largest amount of salable new energy to our economy.

DERIVATION OF RELATIONSHIP

A totally integrated synfuel or synthetic energy system is composed of many different unit operations. For example, a coal gasification system for the production of SNG consists of coal mining, transportation of coal to the gasification plant site, conversion of the coal to SNG and other products, disposal of unwanted residuals, transport of the gasification plant products to transmission lines and product distribution points, transport of these products to storage and the end-product users, and recycling of certain product streams such as water to particular unit operations. Air, water, and land pollution control and the acquisition of raw materials other than the primary energy source (coal) are some of the supporting activities in a hypothetical system for producing salable SNG.

All of these unit operations require energy in one or more forms.

---

* A generalized definition for the Second-Law efficiency is the ratio of the least available work required to the actual available work used and includes entropy changes.

For a totally integrated synthetic energy-producing system composed of many different unit operations in the steady state, the overall efficiency for salable energy production is given by:

$$\frac{E_P}{E_F + E_X} = f_{sy} \qquad 1)$$

Where, per unit of primary energy source:

E_P = Energy content of salable energy products

E_F = Energy content of primary energy source

E_X = Sum of energy contents of all energy inputs except primary energy source

f_{sy} = Energy production efficiency.

E_X includes the nonprimary energy inputs and, depending on the system boundaries, the capital energy investment in system construction possibly amortized over the life of the system or specific system units, and the energy consumed in producing the materials introduced into the operating system.

Similarly, the energy production efficiency for the same integrated system is given by:

$$f_1 \cdot f_2 \cdot f_3 \cdots f_n = f_{sy}$$

where:

$f_1 \cdots f_n$ = The energy efficiency of each unit operation in the integrated system.*

Lumping all unit operations except one together gives:

$$f_o f_p = f_{sy} \qquad 2)$$

where:

f_o = The product of the energy efficiencies of all unit operations except one

f_p = The energy efficiency of one unit operation such as the process for converting the primary energy source to synfuel

Equating (1) and (2) and rearranging gives:

$$\frac{E_P}{f_p(E_F + E_X)} = f_o \qquad 3)$$

Now, let the net energy production ratio (N) for the integrated system be given by:

$$\frac{E_P - (nE_F + mE_X)}{(nE_F + mE_X)} = N \qquad 4)$$

where:

n = Fraction of E_F diverted to other than salable energy products

m = Fraction of E_X diverted to other than salable energy products

$(nE_F + mE_X)$ = Total energy consumed by integrated system

This model assumes that the energy "consumed" within the integrated system consists of energy losses and the energy diverted to other than salable energy products. The model also assumes that E_P is derived from E_F or both E_F and E_X. Diagrammatically, the system can be represented by:

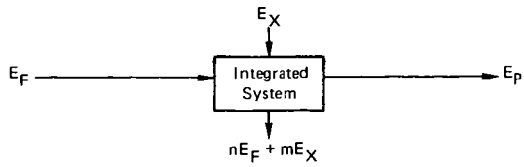

* For those systems that contain parallel unit operations, each parallel block is one unit operation.

The input-output balance is:

$$E_F + E_X = E_P + nE_F + mE_X$$

The coefficient, m, is 1.0 in many systems that consist of individual unit operations where none of E_X contributes to E_P, such as in gas transmission and coal mining. In other systems, m can be less than 1.0 because some of the unit operations derive a portion of E_P from E_X. For example, E_X might be used to generate hydrogen from water for use within the system to convert the primary energy source to energy products.

If all the energy consumed is of the nonprimary type, i.e., n is zero, the total system is replacing exactly the amount of external nonprimary energy source inputs consumed as salable synfuel when N is zero. When N is greater than zero, the total system is producing an amount of energy as salable synfuel equal to the sum of the external nonprimary energy source inputs consumed by the system plus an additional increment as salable synfuel. Where part of the energy content of the primary energy source is used within the integrated system, this energy input (nE_F) is added to mE_X to compute N by equation (4). The variation of E_P and N with the type of energy consumed is summarized in Table 1.

Table 1. VARIATION OF E_P AND N WITH TYPE OF ENERGY CONSUMED BY INTEGRATED SYSTEM

	Salable Energy Products, E_P		
Energy Consumed	$N = 0$	$N < 0$	$N > 0$
All non-primary	$E_P = mE_X$	$E_P < mE_X$	$E_P > mE_X$
All primary	$E_P = nE_F$	$E_P < nE_F$	$E_P > nE_F$
Non-primary and primary	$E_P = (nE_F + mE_X)$	$E_P < (nE_F + mE_X)$	$E_P > (nE_F + mE_X)$

Rearranging (4) to solve for E_P and substituting for E_P in (3) provides:

$$\frac{(nE_F + mE_X)(N + 1)}{f_p(E_F + E_X)} = f_o \qquad 5)$$

For given values of N, f_p and f_o, the total energy consumed by the integrated system is the same whether this input is made up of nE_F only, mE_X only, or both. So for various assumed values of N, f_p, and f_o, the total energy consumed ($nE_F + mE_X$) can be calculated as a function of E_F and expressed as a percentage of the energy content of the primary energy source (percentage factor x E_F). This can be achieved for example by assuming that nE_F is zero and then solving for mE_X.

$$mE_X = \left(\frac{f_o f_p}{N + 1 - f_o f_p}\right) E_F \qquad 6)$$

where:

$\frac{f_o f_p}{N + 1 - f_o f_p}$ = Fraction of primary energy source energy equivalent utilized within system

Thus, Figure 1 shows a family of curves for N equal 0 to 20 and f_p equal 75% in which f_o is plotted against this percentage factor. Figure 2 is a plot of the energy production efficiency of the fully integrated system (f_{sy}) against this factor and was constructed in a similar manner. Several variations of the plot format are of course possible, such as changing the units of the ordinate to consumed energy units by using a specified primary energy source.

DISCUSSION

The family of curves presented in each figure illustrates the quantitative relationship of the energy inputs consumed by the integrated system and the efficiencies of utilizing these inputs to the net energy

production ratio of the integrated system. For a given system, the higher the net energy production ratio, the greater the efficiency of converting the energy inputs to salable energy products. However, it can be seen from the curves in Figure 2 that a synfuel production system can be operated at a higher overall efficiency for salable energy production (f_{sy}) than a similar system, but still have a lower net energy production ratio (1). The curves can thus aid in the comparative analysis of several systems.

The curves can also be used for predictive purposes to assist in the optimization of a new system. For example, calculation of f_p from the synfuel conversion process characteristics and construction of the appropriate set of curves similar to those in Figure 1 permits the energy consumed ($nE_F + mE_X$) to be related quantitatively to f_o and N. In an actual integrated system, tabulation of ($nE_F + mE_X$) from the energy budget would permit the range of possible N's to be determined as a function of f_o. Depending on the actual values of the parameters, it might be concluded that a selected N value is not possible unless a finite improvement can be made in f_o. Modification of one or more unit operations to supply the necessary incremental increase in f_o could then be considered. Conversely, for a constant f_o, a Figure-1 type plot could be prepared for a range of f_p's of one unit operation, and its effect on the system N's and energy consumption could be considered in the same manner.

Several interesting conclusions can also be drawn from the figures regarding the characteristics of integrated energy-producing systems. It can be seen that ($nE_F + mE_X$) exhibits a series of maximum permitted values at the maximum f_o; i.e., when all of the unit operations except f_p are functioning at idealized efficiencies of 100%. A tabulation of the maximum energy inputs expressed as the product of a percentage factor and E_F can be compiled for different N's and f_p's as shown in Table 2.

Table 2. MAXIMUM VALUES OF TOTAL ENERGY INPUT

N	f_p, %	Factor*
1.0	100	1.000
1.0	75	0.600
1.0	50	0.333
2.0	100	0.500
2.0	75	0.333
2.0	50	0.200
3.0	100	0.333
3.0	75	0.231
3.0	50	0.143
5.0	100	0.200
5.0	75	0.143
5.0	50	0.091
10.0	100	0.100
10.0	75	0.073
10.0	50	0.048

*Maximum value of ($nE_F + mE_X$) is Factor x E_F.

For a given value of N, the maximum value of the energy consumed decreases more rapidly with f_p at low N values as compared to the corresponding decrease at high N values, but the maximum value permitted at the higher N's is quite small compared to the corresponding value at the low N's. Thus, for high net energy production, the maximum energy input into the integrated system is a relatively small fractional equivalent of the energy content of the primary energy source even at the high f_p's. This means that high f_o's are very desirable in the development of synthetic energy production systems. For values of N of about 10 or more, the maximum value of the energy consumption at idealized f_o's or f_{sy}'s of 100% is less than one-tenth of E_F in all cases. So in real systems where the f_o's and f_{sy}'s are less than 100%, the maximum energy consumption permitted to achieve high net energy production ratios will be considerably less than one-tenth of E_F. (However, as alluded to in the Introduction, it is not essential that all systems have high net energy production ratios because of the differences in quality of the energy inputs and products.)

Another observation that can be made from the figures is that at high N's, the rate of change of N with f_o or f_{sy} is small compared to the rate of change at smaller N's. The overall system efficiency will therefore have more effect on the absolute value of $(nE_F + mE_X)$ at the lower net energy production ratios.

SUMMARY

The basic concept proposed in this paper is believed to be broadly applicable and useful for the development of new synfuel supplies. The concept also suggests ground rules for the analysis of the net energetics of fully integrated systems. Support for the methodology is expected from its application to real systems.

REFERENCES

1. Klass, D. L., "A Long-Range Approach to the Natural Gas Shortage Utilizing Nonfossil Renewable Carbon," in *ACS Div. Fuel Chem. Prepr., 20,* (2), 33-45 (April 6-11, 1975).

2. "Fuel Processes Must Consider Energy Costs," *C&EN 53* (22), 18-19 (1975) June 2.

3. Chapman, P., "The Ins and Outs of Nuclear Power," *New Sci. 64,* 866-869 (1974) December 19.

4. Wright, J. and Syrett, J., "Energy Analysis of Nuclear Power," *New Sci. 65,* 66-67 (1975) January 9.

5. Clark, W., "It Takes Energy To Get Energy; The Law of Diminishing Returns Is in Effect," *Smithsonian 5,* 84-90 (1974) December.

6. Davis, W. K., "Nuclear Power's Contribution to Energy Growth." Paper presented at the Atomic Industrial Forum Conference on Accelerating Nuclear Power Plant Construction, New Orleans, March 3, 1975.

7. "Shale Oil's High-Risk Future," *Bus. Week* No. *2378,* 87-88 (1975) April 28.

8. "An Abrupt Setback for Shale Oil," *Bus. Week* No. *2352,* 29 (1974) October 12.

9. Ghosh, S. and Klass, D. L., "Conversion of Urban Refuse to Substitute Natural Gas by the Biogas™ Process," Proceedings of the Fourth Mineral Waste Utilization Symposium, Chicago, Illinois, May 7-8, 1974.

10. Clark, C. E. and Varisco, D. C., "Net Energy and Oil Shale." Paper presented at the 8th Oil Shale Symposium, Colorado School of Mines, Golden, Colorado, April 17, 1975.

11. "The Analyst's Precedent," *New Sci. 65,* 51 (1974) January 9.

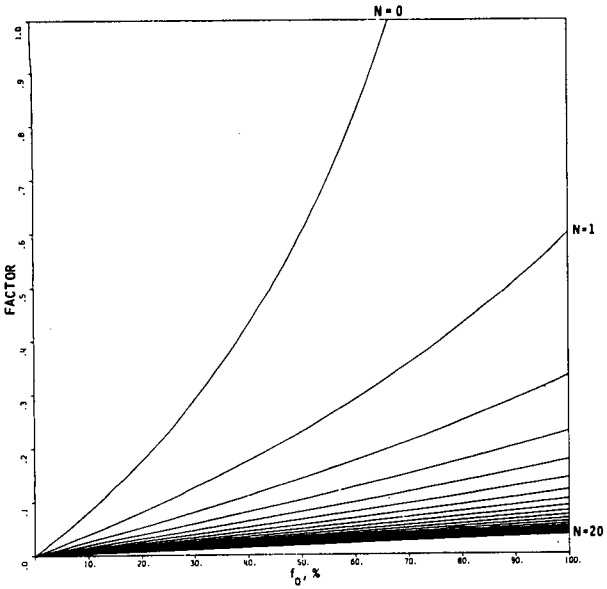

Figure 1. f_o vs. FACTOR FOR f_p OF 75.0%

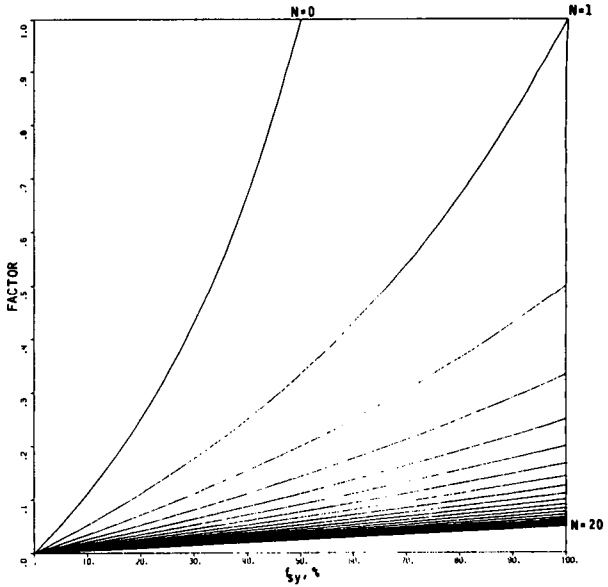

Figure 2. f_{sy} vs. FACTOR

THE ENERGY ANALYSIS OF WOOD PRODUCTION FOR FUEL APPLICATIONS

Norman Smith and Thomas J. Corcoran

University of Maine, Orono, Maine

Introduction

Wood was the prime fuel source for the United States during much of the 19th century. Consumption probably peaked around 1880 at 146 million cords* per year. Coal replaced wood for most applications. However, use of wood for residential heating continued to be important in some rural areas until after World War II. Residential use of waste wood and sawdust from wood utilizing industries persisted after the use of wood harvested directly for fuel has practically ceased. A number of industries continued to use their waste wood in boilers to produce steam for electricity generation and process heat. However the convenience and low cost of heavy oil fuels caused all but a very small number of operations to cease using their waste wood. The conical incinerator became a common sight at sawmills in the 1960s while wood drying kilns were being fired by oil in another part of the yard.

Salvage of waste wood from sawmills began anew a few years ago when some paper mills began to experience pulpwood shortages. Discarded pieces were chipped and sold for pulping. More recently there has been interest in using bark as boiler fuel partly because of the disposal problem and partly because of increased fuel prices. Since the Arab oil embargo of 1973 serious attention has been given to use of wood as a fuel on a large scale. For example, Szego and Kemp (8) have evaluated the possibility of energy farms on which woody plants would be produced for fuel use. The Maine Office of Energy Resources (9) has analyzed the possibility of methanol production from wood. Huff (4) has reported on the development of an automatically controlled furnace suitable for residences which can burn wood chips made from logging residues or puckerbrush. Smith (7) has examined conceptual designs for mechanized short rotation forestry, particularly the harvesting phase.

Methods of wood harvesting have been revolutionized recently as mechanization has come to forestry. A number of harvesting methods are now in use in which the basic operations of felling, transport to a landing, processing and loading for transport are approached in very different ways. This paper examines the energy inputs to each sub operation to allow estimation of total energy relationships for any complete system whether or not it is currently in use.

*A cord is a volume measure of 128 ft^3 of piled round wood, usually represented as a pile of 4 ft logs, 4 feet high and 8 feet long. Volume scaling is still much used in forestry as many operations are volume rather than weight sensitive. However a cord represents very different weights of dry matter depending on the species of wood. Weight per cord also varies greatly with moisture content. Green wood is around 50% moisture content. Dry matter per cord varies from about 1900 lbs for pine to 3500 lbs for hardwood such as birch and maple.

It should be stressed that for a large portion of U.S. forest lands the only significant operation involved in wood production is that of harvesting. Reforestation is often by natural means, very little fertilization or cultivation is carried out. Construction of a road network and actual harvesting of the trees at the end of the growing cycle is, by far, the greatest purchased energy input to wood production. The energy used in road building varies greatly with terrain and harvesting pattern. It is probably small in relation to other inputs and is neglected in this analysis.

Harvesting Equipment

For many years the axe and bucksaw were the sole means of felling and preparing wood for transport to the users' premises. Primary transport from the stump to the collection point at a roadside or on a riverbank, was by horse or ox team. Production rates for this system varied tremendously depending on size of trees, haul distances, terrain, etc. but it is generally reckonned that one man can fell, delimb, cut up and load one cord of wood per day while one horse will take about two hours to drag out that volume of wood.

Use of gasoline powered chainsaws has increased a worker's capacity about ten fold. Modern saws allow a man to fell, delimb and cut up about 1.3 cords per hour. Use of small tracked vehicles equipped with winches to skid out bunches of tree trunks displaced the horse and ox, but a multitude of new equipment is now displacing these devices.

Short descriptions of the main classes of equipment considered in this study follow:

Chain saw: A portable, gasoline engined, manually controlled machine with a toothed chain used to fell trees and remove limbs.

Feller-Buncher: A mobile machine designed to shear a tree at the stump, and hold it by means of a clamp and cutting head while it swings and deposits the tree onto a pile on the ground. The cutting head is usually composed of two hydraulically actuated shearing blades. Power requirements are from 80 - 130 horsepower.

Delimber Buncher: A mobile machine carrying a unit which strips the limbs and top off the bole of a previously felled tree and deposits the stripped bole in a pile on the ground ready for removal from the stump area to a roadside landing. Usually requires around 120 horsepower.

Wheeled Skidder: A tractor unit, usually with frame steering and four wheel drive, equipped with a winch or grapple which gathers and skids loads of full trees, tree length boles or logs behind itself from the stump area to a roadside landing. Power requirement usually exceeds 70 horsepower.

Wheeled Forwarder: A frame steered, self-loading vehicle equipped with hydraulically operated grapple and loading boom and a carrier or bunk to support its load of logs. Horsepower requirements vary from 40 to 100 horsepower depending on size.

Loader: A hydraulically operated boom and grapple which can be mounted on a truck chassis. It is used to gather logs or tree lengths from a pile and build a load on a truck body.

Chipper: A machine which reduces logs and tree length wood to small chips by means of a rapidly rotating drum or disc, carrying a series of blades. The chips usually leave the cutting device in an air-stream induced by the fan effect of the chipping mechanism and are thus automatically conveyed into transport vehicles or stock-piles.

Power requirements are around 300 horsepower for a machine capable of chipping around 25 tons per hour.

Energetics of Mechanized Harvesting Systems

Table I shows typical production rates and fuel consumption figures for the various pieces of equipment previously described. The writers were fortunate in that the American Pulpwood Association published the results of a 1974 survey of members' operations (1) while this paper was being written. Whenever possible the data from that survey was used in preparing the table. The data sources from which other figures were calculated are indicated in the footnotes. Figures for the energy subsidy represented by the energy used in manufacturing the equipment are very approximate and were derived by assuming an average figure of 25,000 BTU per lb consumed in the manfacturing process (most of the equipment weight is in the form of steel which requires around 21,000 BTU per lb in the transformation from ore in the ground to steel plate (2)). The energy used in manufacture was divided by the approximate lifetime production of the equipment to arrive at a figure of BTU/ton of dry wood.

The approximate energy cost of practically any system of production using present equipment can be calculated from the table. For example, a very common system uses chain saw felling and delimbing, tree length skidding to a forest landing, loading the tree length material onto large trucks for transport to a mill yard, unloading by the same type of loader used in the woods, followed by chipping.

Many operators are now moving toward chipping whole trees in the woods with a fully mechanized system. The steps might be as follows: -Felling with a feller-buncher; grapple skidding to a landing; chipping, with pneumatic conveying into trucks as an integral part of the operation; transport; unloading by tipping the whole truck body backwards to dump the chips by gravity.

Table II illustrates the breakdown of energy use in these two systems, including a 50 mile haul to the utilization site, which appears to be a fair average for much of the U.S.

Several interesting facts appear from the comparison:

1. Both methods, though very different in procedure, have approximately the same unit energy consumption. In fact this is so for most of the mechanized systems for producing wood from the tree trunk. Perhaps this is not surprising as most of the same operations appear in each system though they may be performed in a different order.

2. Transportation, even if only to a user 50 miles from the growing site can represent almost 50% of the total energy input to present the product to the consumer. It may seem that substantial savings could be made by consuming the wood closer to the growth site. However, economics rather than energetics will decide whether this will be done.

3. Reduction of the wood from tree length to the convenient form of wood chips takes only about 20% of the energy used in production. Even though the bulk of the wood is considerably increased by chipping, weight, not volume, remains the limit on load size for transportation. The bonus of self loading from the chipper and easy unloading of chips make in-forest chipping very attractive.

4. Comparing the energy consumption in these systems with the man-axe-horse combination of the past, where about 8 man hours and two horse-power hours produced one cord of wood ready for transport, shows one of the problems of mechanization. If an overall efficiency of 20% is assumed for the animal power units involved, the energy required to prepare the wood for transport to the user would be less than 30,000 BTU per ton of dry material. This compares with about 200,000 BTU/ton for the same operations in mechanized systems. The same order of increase in energy consumption per unit of production can be found in mechanized agriculture (6). However, the comparison of energy use to energy yield is still very favorable. A ton of dry material has a gross energy content of about 16 million BTU. Even allowing for the fact that each ton of dry matter is delivered in the form of green wood containing, for example, 50% moisture, ie with a ton of water to be evaporated per ton of dry material, the net energy available will exceed 14 x 10^6 BTU/ton of dry material.

   On this basis the energy used in processing the wood represents less than 4% of the energy available from the wood.

5. The energy input to wood production in the form of equipment manufacture is fairly small in relation to energy for operating the equipment. Manufacturing energy subsidy is less than 20% of the total energy input per ton of wood for all of the equipment in Table I and averages around 10%.

It would certainly appear that fuel used to manufacture and operate machinery to produce wood for fuel would be energy well used. However it must be remembered that use of wood, as currently harvested, for fuel would compete with other wood uses, such as for paper and lumber. In all probability any large scale use of wood for fuel will need to come from an increase in production over and above current needs.

The most obvious source of additional wood is in the parts of the tree now discarded - the branches and tops, along with undersized and other undesirable trees. This material probably represent around 20% of the growth on land now harvested, i.e. on land which has a road system already developed and paid for by other forest products. The branch material and small trees will probably need to be chipped as early in the harvesting process as possible to reduce bulk and provide an easily handled product.

Two basic methods of handling the branch material are possible. One would be to skid whole trees to the landing, use a delimber in a stationary position and chip anything stripped off the boles. Skidding whole trees

would be very little different from skidding delimbed material, but experience has shown that up to half of the branches are broken off as the trees are skidded out. Feeding the stripped branches into a chipper need be no more energy consuming than feeding tree length logs. The second system might use a delimber at the stump and leave the branches and undesirable wood at the growth site. Some work has been reported from Finland (3) on this possibility. Small bulldozers or wheeled loaders were used to pile up the branch material which was then brought out by a skidder/forwarder for processing at the landing or a later stage. Performance figures from this experimental operation are included in Table I.

Table III compares the additional energy inputs needed to obtain these harvesting residues. Once again it is apparent that the wood fuel can be delivered to a consumer for less than 5% of its energy content. The more economical method unfortunately loses a good percentage of the branch material. This leads to the consideration of increasing production of wood specifically for fuel. It is generally accepted that in Northern areas growth to maturity averages about 1 ton of dry matter per acre per year. However Ribe (5) has shown that more than two times the wood present at harvest of a mature stand has grown and died in the competition for sunlight and rotted away during the growth of the stand. This indicates that visiting each site perhaps twice during the growing cycle to remove dead wood and thin too-dense areas could increase total yields of wood by perhaps 100%. Much of the material obtained would probably be "fuel grade". However the economics of such a practice are unknown and the question of what effect removal of such quantities of material might have on the available nutrient pool in the soil is certainly important.

A further possibility for wood fuel production is for intensive short rotation forestry where small trees might be harvested every five or ten years with a mobile mower/chipper laid out similarly to a grain combine. There are distinct engineering economies to this type of machine where each component performs its function the whole time, for example, the mowing mechanism mows continuously and the chipper is continuously loaded. Equipment for full size tree handling operates intermittently e.g. the shear on a feller buncher shears the tree and then is out of use until the tree has been lifted and bunched by the other parts of the machine. Such a machine might be expected to cover one acre per hour for a throughput of about 20 tons of wood.

Fertilization of fast growing species in a short rotation system could produce annual yields of around 5 or 6 tons of dry matter. The use of species which would grow up from existing root systems could provide very fast regeneration after harvest, though wood from such species might be of too low quality for use other than as fuel. Replanting might be necessary only after four or five harvesting cycles - perhaps only every 20 years. Assumptions and energy cost estimates for such a system are given in Table IV.

The intensified production, as in agriculture, results in a greater energy cost per unit of production, with approximately half the energy input accounted for by fertilizer. Omission of the fertilizer would probably reduce the annual yield to around 2-3 tons per acre, but would bring the energy cost per unit in line with long rotation systems. It is interesting to speculate what might be done to fertilize intensive energy farms with garbage and sewage sludge. Actual field experiments would be well worthwhile. However, even with full fertilization, wood fuel from short rotation systems can probably be produced at an energy cost not exceeding 7% of its energy content.

In summary it can be said that the energetics of wood fuel are very attractive. The fuel itself has many desirable qualities - it contains practically no sulphur, only about 1% ash, can be burned cleanly, is reasonably compact (about 100,000 BTU/ft^3 in chip form) and represents a renewable energy source. Nevertheless economics will decide the acceptability of wood fuel. A material as versatile as wood will be competed for by many different uses.

REFERENCES

1. _____ "Fuel Requirement for Harvesting Pulpwood" American Pulpwood Association, 1975.

2. Berg, C. "Energy Conservation through Effective Utilization", Science, Vol. 181, pp 128-138, 1973.

3. _____ "Bunching and Transportation of Branch Raw Material", Folia Forestalia 237, Finnish Forest Institute, 1975.

4. Huff, E.R. "Wood Chip Furnace Progress Report" Agric. Eng. Dept., Univ. of Maine, Orono, Maine, 1974.

5. Ribe, J.H., "A Review of Short Rotation Forestry" Misc. Rep. No. 160, LSA Expt. Sta., Univ. of Maine, Orono, Maine, 1974.

6. Smith, Norman, "Engineering a Food Supply" ASAE Paper No. NA70-402, 1970.

7. Smith, Norman, "Concepts for Mechanized Production of Woody Fiber", Canadian Agricultural Engineering, Vol. 16, No. 1, 1974.

8. Szego, G.C. and C.C. Kemp, "Energy Forests and Fuel Plantations" Chemtech, May, 1973.

9. _____ "Maine Methanol, Office of Energy Resources, Augusta, Maine, 1975.

TABLE I

APPROXIMATE ENERGY USE IN WOOD PRODUCTION OPERATIONS

A. Energy Subsidy due to Equipment Manufacture

Machine Type or Operation	Typical Machine Weight (lb)	Production Rate	Life	Manufacturing Energy Subsidy (BTU/ton dry wood)[b]
Felling:				
Chain saw: (Felling and delimbing)	10	2.6 cords/hr [c]	2,000 hrs	32.0
Feller-Buncher	52,000	8.38 cords/hr[c]	10,000 hrs[d]	10,350
Delimbing:				
Limber Buncher	45,000	9 cords/hr[e]	10,000 hrs[d]	8,350
Trans. to Landing:				
Wheeled Skidder whole trees	25,000	3.08 cords/hr	13,000 hrs[d]	10,400
Forwarder residues	27,000	9.2 green/tons[f]	13,000 hrs[d]	11,300
Wheel loader: prebunch residues	4,000	4.5 green/tons[f] hr	13,000 hrs[d]	3,400
Yard Operations				
Chain saw: Bucking to short lengths	10	3.65 cords/hr[c]	2,000 hrs	23.0
Loading:				
tree length	25,000	10.78 cords/hr[c]	10,000 hrs	3,900
Trucking:				
small truck	12,000		300,000 mi[d]	6,700[i]
large truck	25,000		500,000 mi[d]	3,300[j]
Chipping				
whole tree chipper	57,000	10 cords/hr	10,000 hrs[d]	9,500
Auxiliary				
management vehicles etc.	4,000		100,000 mi	1,000[k]

a. Assumes 25,000 BTU/lb consumed in equipment manufacture.
b. Assumes 3,000 lb dry wood per average cord.
c. Source - "Fuel Requirements for Harvesting Pulpwood" - APA Survey
d. Source - Estimate of Woodlands Manager.
e. Source - Average of two company operations.
f. Source - Folia Forestalia 237 - Finnish Forest Institute
g. Estimate based on engine size and research reports.
h. Average figures for 100 mile round trip.
i. 10 cord loads, handles 45,000 tons in useful life
j. 25 cords, loads handles 187,500 tons during useful life.
k. Assumes 1 vehicle per fully mechanized harvesting crew.

TABLE I

APPROXIMATE ENERGY USE IN WOOD PRODUCTION OPERATIONS

B. Equipment Operation and Overall Energy Requirements

Machine Type or Operation	Fuel Consumption	Energy Use[b] (BTU ton dry) wood	Total Energy Requirements (BTU/ton dry wood) to nearest 1000 BTU
Felling:			
Chain saw: (felling and delimbing)	0.41 gal/cord[c]	33,000	33,000
Feller-Buncher	0.64 gals/cd[c]	59,700	70,000
Delimbing:			
Limber Buncher	0.62 gals/cd[d]	57,900	66,000
Trans. to Landing			
Wheeled Skidder whole trees	0.95 gals/cd	88,500	99,000
Forwarder residues	0.41 gals/green ton[g]	115,00	126,000
Wheel loader: prebunch residues	0.24 gals/green ton[g]	67,200	71,000
Yard Operations			
Chain saw: Bucking to short lengths	0.39 gals/cd[c]	31,200	31,000
Loading: tree length	0.47 gals/cd[c]	43,500	47,000
Trucking:			
small truck	.04 gals/cd mi[c]	373,000	380,000
large truck	.02 gals/cd mi[c]	187,000	190,000
Chipping			
whole tree chipper	.7 gals/cord[d]	65,500	75,000
Auxiliary management vehicles etc.	0.72 gals/cd	57,600	59,000

a. Assumes 25,000 BTU/lb consumed in equipment manufacture.
b. Assumes 3,000 lb dry wood per average cord.
c. Source - "Fuel Requirements for Harvesting Pulpwood" - APA Survey.
d. Source - Estimate of Woodlands Manager.
e. Source - Average of two company operations.
f. Source - Folia Forestalia 237 - Finnish Forest Insitute.
g. Estimate based on engine size and research reports.
h. Average figures for 100 mile round trip.
i. 10 cord loads, handles 45,000 tons in useful life.
j. 25 cords, loads handles 187,500 tons during useful life.
k. Assumes 1 vehicle per fully mechanized harvesting crew.

TABLE II

ENERGY USE IN TWO WOOD PRODUCTION SYSTEMS

(a) Tree length System	BTU/Ton dry wood
Felling and Delimbing (Chain saw)	33,000
Skidding	99,000
Loading (tree length)	47,000
Transport (50 miles one way)	190,000
Unloading	47,000
Chipping	75,000
Auxiliary	59,000
Total	550,000

(b) Whole tree chip system	
Felling and Bunching	70,000
Skidding	99,000
Chipping	75,000
Transport	190,000
Unload	negligible
Auxiliary	59,000
Total	493,000

TABLE III

ENERGY USE IN HARVESTING FOREST RESIDUES FOR FUEL

(a) Whole trees skidded, delimbed at landing	BTU/ton dry wood
Additional energy cost of skidding	negligible
Chipping	75,000
Transport	190,000
Unload	negligible
Auxiliary activities	59,000
Total	324,000

(This system probably loses half the available material in skidding)

(b) Residues prebunched in stump area, Forwarder used to transport to landing	
Prebunching residues	71,000
Forwarding	126,000
Chipping	75,000
Transport	190,000
Unload	negligible
Auxiliary activities	59,000
Total	521,000

TABLE IV

PROBABLE ENERGY REQUIREMENTS FOR A SHORT ROTATION WOOD FUEL CROP

Assumptions

Cultivate and plant at 20 year intervals - 6 gallons fuel/acre/planting
Growth rate - 5 tons/acre/year
Fertilizer - 200 lb nitrogen/acre/year @ 13,000 BTU/lb mfg. and application cost
Harvesting - equivalent to present chipping in energy cost
Transport to truck or stockpile - equivalent to skidding
Loading trucks from stock pile or primary transport - equivalent to tree length loading

Energy Use Estimates		BTU/ton dry wood
Cultivation and Planting		8,000
Fertilization		520,000
Harvesting		75,000
Transport to stockpile		99,000
Load trucks		47,000
Transport to User		190,000
Unload		negligible
Auxiliary operations		59,000
	Total	998,000

AN ENERGY BUDGET FOR A HYPOTHETICAL BIOMASS PLANTATION

Robert E. Inman
Manager, Plant Biology
Stanford Research Institute
Menlo Park, CA 94025

Any fuel production process is sensitive to energy expenditure, since its net value as a productive process must be determined by weighing the quantity of energy produced against the quantity consumed during the process. A coal mining process, for example, must deliver more energy in the form of coal than it consumes in coal equivalents during the process of mining and transporting the coal. As long as the net balance is sufficiently in favor of energy capture, the process is worthwhile. If the balance should swing in favor of fuel or energy consumption, the coal is better left in the ground, other things being equal. The solar energy used to manufacture the organic raw material for the coal and the geologic pressures that combined through the ages to transform that material into coal need not be considered in the energy budget. The expenditure of these energies was circumstantial to man's need for or his ability to use the end product and therefore is circumstantial to the process.

The value of plant biomass production for use as an energy feedstock must also be evaluated on the basis of its energy budget. The production and collection of plant biomass require energy expenditure, which must be weighed against the energy value of the biomass produced to determine the net value of the process. If the input required is greater than the energy equivalent that can be harvested, the biomass is better left in the seed. As in the case of coal, the solar energy input need not be considered as energy expended, for in spite of its critical role in plant biomass production its advent is circumstantial to man's capability to utilize biomass. Likewise, the calorific or physiological energy consumed by human labor during the process is also discounted, since it is assumed that the laborers would consume that energy regardless of where or whether they labored.

To determine the energy budget for biomass production it is first necessary to estimate the energy value of the anticipated biomass yield. A yield of 30 dry tons per acre-year has been suggested as a realistic figure, providing that an adequate developmental research program is initiated. The energy captured in 30 dry tons is 450 million Btu, assuming a heating value of 7,500 Btu per dry pound.

Next, energy consumption must be estimated. This task requires, first, that a biomass farming system be visualized, then that the energy consuming operations that mediate the system be specified, and finally that the energy consumed in each of the operations be determined, and their sum calculated.

The biomass production system envisaged is the formal biomass plantation. The objective of the plantation would be to produce through intensive farming practices the greatest amount of biomass possible per unit time-space, at the lowest possible cost, and with a minimum of energy expenditure.

Conceptualization of the Plantation

A biomass plantation would be relatively large in terms of conventional agriculture, covering perhaps an area 15 miles square (144,000 acres). A facility for converting the biomass to usable energy (e.g., electric power plant, gasification plant) would be located at the center of the plantation. The biomass crop would consist of a conglomerate of species selected primarily on the basis of high biomass yield. The biomass crops with the highest yields would be located in the center of the plantation to reduce the costs of transportation of dried biomass from the drying areas to the conversion facility. Lower yielding species, such as short-rotation hardwoods, would be located at the fringes of the plantation or perhaps in certain sections of the plantation on land that was marginal for agricultural production. Each species would be cultivated in accordance with optimum planting, harvesting, and rotation schedules as determined in earlier field testing programs. Schedules would entail multiple cropping of annuals and multiple harvesting of perennials. Individual crop schedules would be integrated to provide as nearly as possible a continuous supply of biomass to the conversion facility. Conventional farming practices would be used where appropriate or modified to exploit either production potential or energy-costs savings to the fullest extent possible. Examples of such modifications would be the use of "no-till" methods, the harvest of roots and crowns in addition to aerial plant parts (annual crops), and the use of understory or shade-loving crops capable of full growth and development beneath the canopies of the primary biomass crops. Sun-drying of harvested biomass would be accomplished at strategically located drying areas. Yields of 30 tons of dry biomass per acre-year would be anticipated.

The plantation operation ideally would produce three crops of annuals per year or a harvest of perennial crops three times per year. Assuming the use of no-till methods, the following sequence of field tasks is envisaged.

Before planting, the fields would be cleared of weeds by the application of an herbicide to eliminate competition for light, water, and plant nutrients. Planting the biomass crop could be combined in one operation with the application of fertilizer. At an appropriate interval after planting, a sidedressing of fertilizer would be applied, although it should be possible to apply additional fertilizer with the irrigation water. The biomass crop would be harvested by means of self-propelled combines, which would chop the biomass into small pieces

to facilitate drying. The chopped biomass would then be trucked to one of several drying areas on the plantation and dumped, whereupon a truck or similar vehicle fitted with a front-end blade would turn the piles of biomass until sufficient drying had occurred. The sun-dried biomass would then be loaded into suitable conveyances for transport to the plant gate. The schedule of field tasks would be repeated three times each year for annual crops such as sunflower or kenaf. In the case of perennial crops, replanting would be necessary only once every three to five years, even though the aerial portions of the crop were harvested three times each year. Short rotation hardwood species would be harvested once every one to three years, during the winter months only.

Aircraft would apply insecticides and fungicides when and where needed, the number of applications depending on the crops grown and the severity of their associated pest problems. It is assumed that an average of two such operations per acre-year would be needed across the entire plantation.

Irrigation water would be applied at two-week intervals by an automatic center-pivot overhead sprinkling system capable of watering two 160-acre plots per 24-hour day. The system could be moved as needed, requiring about three hours for each changeover. It is calculated that two and one-third systems would be needed to irrigate each 10,000 acres of the plantation. The plantation may be pictured as being located in the southwestern United States, where conditions would be the most conducive to year-round production and air-drying of the biomass.

The plantation would be operated seven days per week, 12 hours per day. Irrigation activities would be performed 24 hours per day.

This system was chosen as a study example because:

- It represents the ultimate in an organized approach to biomass production and collection.
- It is the system by which the largest yields can be realized in units of biomass produced per unit of time and space.
- It is the most energy intensive system in regard to the energy input required that can be visualized at this time, representing perhaps a worst case situation.

The energy consuming operations constituting the system are those concerned, either directly or indirectly, with biomass growing and harvesting. These would include not only such operations as field tasks, which are direct users of fossil fuel energy or consumers of electrical power on the plantation proper, but also the manufacturing processes for all equipment and materials used in the field tasks.

A discussion of energy consumption on the hypothetical plantation is presented below under the categories of direct fuel and power usage, farm chemicals manufacture, and farm machinery manufacture.

Direct Fuel and Power Usage

The technique for producing energy feedstock would naturally be chosen with energy conservation in mind. Hence, the practice of no-till farming, which requires a minimum of energy expenditure in the field, is considered a reasonable and realistic choice for the biomass plantation. The sequence of field tasks was described earlier. The energy consumed in direct fuel and power usage is shown in Table 1.

With the multiple cropping of annuals in mind, it is envisioned that this sequence of operations would be repeated three times each year, yielding an annual total of 30 tons of dry plant biomass per acre. In the case of perennial crops, it is apparent that certain operations, such as herbicide application and replanting, would not have to be performed three times each year even though three harvests per year were reaped. Hence, for crops such as Sudangrass, sugar cane and forage sorghums, the energy expended might be somewhat less than that shown in Table 1.

Irrigation water would be applied at a rate of four acre-feet per acre-year by means of an automated sprinkling system, probably of the center-pivot design. It is assumed that the water would be lifted from a network of surface canals to an average head of 50 feet, requiring 77 kWh of electric power per acre-foot dispensed. Miscellaneous electric power required for lighting of service road intersections and other purposes is estimated to be 5 kWh per acre-year for the plantation

Farm Chemicals Manufacture

It is estimated that 600 pounds nitrogen as anhydrous ammonia or its equivalent would be needed per acre-year to obtain yields approaching 30 tons per acre. This amount is two to five times that used in normal crop production. It is assumed that 250 lbs of phosphorus and 100 lbs potassium fertilizers per acre would be needed. Pesticides would be applied at recommended rates as needed. It is assumed that six pounds of herbicide, three pounds of insecticide, and two pounds of fungicide would be sufficient for each acre, since in all likelihood the pesticide needs of a biomass crop would be fewer than those of a conventional cash crop. Insecticides and fungicides, for example, would be needed only when pest infestations or infections became severe enough to restrict biomass production or to significantly reduce the amount of biomass already present in the field. Continuous cropping would also reduce the need for herbicides, especially if high plant densities were used to provide for early canopy closure, resulting in the "shading out" of weeds. The energy consumed in farm chemical manufacture is shown in Table 2.

Farm Machinery Manufacture

The energy expended in the manufacture of farm machinery from the mining of ore to the fabrication of the machinery itself depends on the volume and variety of implements needed for the plantation and their life expectancy. Calculations of the equipment needed to farm one acre, yielding 30 tons per acre-year, were based on a 12-hour workday, a seven-day week, and on the time required for each operation to be performed over 10,000 acres. Calculations of the time required for individual operations revealed that a three-tractor team could:

- Apply herbicide over 10,000 acres in 33 days.
- Plant and fertilize in 36.3 days.
- Fertilize in 33 days, and harvest (cut and chop) 10,000 acres in 26.5 days (with a six-combine team).

These time requirements were found to be compatible with a triple cropping schedule provided that 2 three-tractor teams were used. The number of fresh haul units needed was calculated on the basis of the need to haul the fresh biomass to a drying area within the same time period required by a six-combine team to harvest the biomass. Dry-haul requirements were also calcultaed on this basis. The life expectancey of each piece of equipment was calculated on the basis of a triple cropping schedule. It was assumed that each implement was composed entirely of steel produced from virgin ore. Use of scrap metal as the raw material would reduce the energy requirement in this category by approximately three-fourths. Since the energy required for production of forged steel is greater than that for cold-rolled steel components, it was assumed that the machinery composition was 50 percent forged steel and 50 percent cold-rolled steel. The weight of equipment in tons per year needed to farm 10,000 acres was calculated and multiplied by the appropriate energy factors to determine the energy input for 10,000 acres. The average energy input per acre-year was then calculated, as shown in Table 3.

Table 4 shows that the total energy input for all operations and fabrication is estimated to be about 22.0 million Btu per acre-year. If the energy output is 450 million Btu per acre-year, a net energy capture of about 428 million Btu per acre-year is realized. Thus, dividing gross energy yield by energy consumed results in an efficiency factor of 20.5 for energy capture by the plantation process. This factor would increase with increasing yields over 30 tons per acre-year or with the realization of additional energy economies through the further development of energy conservation practices on the plantation or in manufacturing processes. Conversely, this factor would be decreased by yields lower than 30 tons per acre-year or by the consumption of energy in related processes such as interbasin water transfer.

Table 1

ENERGY CONSUMED IN BIOMASS PLANTATION OPERATIONS
-Direct Fuel and Power Usage-

Operation	Rate per Operation*	Operations per Year	10^6 Btu per Acre-Year
Herbicide Application	0.305 gal dsl/acre	3	0.127
Plant and Fertilize	0.757 gal dsl/acre	3	0.315
Fertilize	0.305 gal dsl/acre	3	0.127
Harvest	1.627 gal dsl/acre	3	0.677
Fresh Haul	2.540 gal dsl/acre	3	1.057
Turn and Dry	0.028 gal dsl/acre	3	0.012
Dry Haul	2.178 gal dsl/acre	3	0.906
Pesticide Application	0.017 gal avt'n fuel/acre	2	0.007
Irrigation	77 KWh/acre-foot	4	3.154
Misc. Electricity	5 KWh/acre-year	1	0.051
Total Direct Fuel and Power Usage			6.433×10^6 Btu/Acre-Year

*Source: Doane's Agricultural Report. Nebraska Tractor Tests, 1969-1971.

Table 2

ENERGY CONSUMED IN BIOMASS PLANTATION OPERATIONS
-Farm Chemicals Manufacture-

Chemical	Rate/Acre-Year	Btu/lb	10^6 Btu/Acre-Year
Anhydrous Ammonia (NH_3)	600 lbs	19,341*	11.605
Phosphorus (P_2O_5)	250 lbs	6,019**	1.505
Potassium (K_2O)	100 lbs	4,158**	0.416
Herbicide	6 lbs	43,560**	0.261
Insecticide	3 lbs	43,560**	0.131
Fungicide	2 lbs	43,560**	0.087
Total Farm Chemicals Manufacture			14.005×10^6 Btu/Acre-Year

* Source: Hoeft, R. G., and J. C. Siemans, 1975. Do fertilizers waste energy? Crops and Soils, November 1975.

** Source: Pimentel, D., et al., 1973. Food production and the energy crisis. Science 182:443-449.

Table 3

ENERGY CONSUMED IN BIOMASS PLANTATION OPERATIONS
-Farm Machinery Manufacture (10,000 acres)-

Machinery	Units	Unit Life (Years)	Steel per* Acre-Year (lbs)	Btu/Acre-Year
Tractors	6	6	0.92	88,854
Planters	3	2	0.60	57,948
Fertilizer Rigs	3	2	0.60	57,948
Herbicide Rigs	3	5	0.12	11,590
Harvesters	6	6	1.60	154,528
Fresh Haul Trucks	32	10	3.20	309,056
Dry Haul Trucks	10	10	1.20	115,896
Turner	1	10	0.10	9,658
Irrigation Pumps	8	20	0.08	7,726
Feeder Lines	30.6 mi	20	4.04	390,183
Sprinkler System	1	20	0.34	32,837
Total Farm Machinery Manufacture				1.236×10^6 Btu/Acre-Year

* 9.4325 KWh/lb;96,580 Btu/lb.
Source: Berry, R. S. and Margaret F. Fels, 1972. The production and consumption of automobiles. An energy analysis of the manufacture, discard and reuse of the automobile and it's component materials. A report to the Illionis Institute for Environmental Quality.

Table 4

ENERGY CONSUMED IN BIOMASS PLANTATION OPERATIONS
-Summary-

Consumption Category	Btu/Acre-Year	% Total Consumption
Direct Fuel and Power	6.433×10^6	29.4
Farm Chemicals Manufacture	14.005×10^6	64.0
Farm Machinery Manufacture	1.236×10^6	5.6
Seed or Rootstock Production	0.217×10^6	1.0
Total Plantation Energy Consumption	21.9×10^6	100.0
Total Plantation Energy Production	450.0×10^6	
Energy Input/Energy Output	1:20.5	

NET ENERGY ANALYSIS OF ETHANOL PRODUCTION

Wm. A. Scheller and Brian J. Mohr

Department of Chemical Engineering, University of Nebraska
Lincoln, Nebraska 68588

INTRODUCTION

In 1972 the Nebraska Agricultural Products Industrial Utilization Committee began a joint program with the Department of Chemical Engineering at the University of Nebraska and the Department of Roads to investigate the suitability of anhydrous ethanol produced by grain fermentation as an automotive fuel additive. Other aspects of this program have been reported previously (4,5). In the overall evaluation of the use of grain alcohol in automotive fuel one should consider the net energy production or consumption associated with the grain alcohol manufacture. As part of a National Science Foundation grant (2) the authors carried out detailed material and energy balances and prepared process designs for a fermentation alcohol plant capable of producing 20 million gallons per year of anhydrous ethanol from corn. A detailed set of utility requirements (steam, electricity, cooling water) for the plant were obtained as a part of this design. This information coupled with Pimentel's analysis (3) of the energy requirements for corn production has made it possible to carry out a detailed total energy analysis for the manufacture of ethanol by the fermentation of corn.

FERMENTATION PLANT

Figure 1 is a block flow diagram of a typical process for producing anhydrous ethanol from corn. Corn is fed from storage to a grinder or hammermill where the particle size is reduced and the interior portions of the grain kernel are exposed. Water is added to the ground corn and the mixture is cooked to solubilize and gelatinize the starch present in the grain. After cooking, amylase, an enzyme, is added to the cooked grain to convert the starch to sugar. The amylase is obtained from fungi propagated on a small portion of the corn. The cooked mixture is placed in fermentation vessels and yeast which has also been propagated within the plant is added. The mixture is allowed to ferment anaerobically for 40 to 45 hours, producing a beer containing 10% alcohol.

This beer is fed to a distillation column and an alcohol-water solution containing 50 to 55% ethanol is produced overhead. The alcohol solution is then sent to a distillation section where the ethanol is concentrated to a 95% solution and undesired materials (aldehydes, fusel oil) are rejected. The alcohol solution is fed to an extractive distillation section where anhydrous ethanol is produced with the aid of benzene. In this analysis a simplified distillation column arrangement has been used to produce ethanol of a purity suitable for use as a fuel additive. A more complex distillation arrangement with a higher steam requirement would be used if beverage grade grain alcohol were being produced.

Bottoms from the beer still contain the non-volatile and non-soluble components from the fermentation section. This material,

known as stillage, is centrifuged and the liquid portion sent to multiple effect evaporators where the dissolved solids concentration is increased to approximately 50%. The cake from the centrifuge is combined with the concentrated liquid solution and dried in a fluidized dryer and conveyer to produce distiller's dried grains plus solubles which is sold as cattle feed. It is a high protein material and is a potential source for recovery of a high purity protein concentrate suitable for human consumption (2,5,6).

Table I contains the utility requirements (2) for a plant to produce 20 million gallons per year of anhydrous ethanol from 7.71 million bushels per year of corn (15.5% moisture, 56 lbs/bu). For convenience they have been expressed per bushel of corn and per gallon of ethanol. These utility requirements have been reduced to a total fuel and fresh water requirement according to the arrangement shown in Figure 2. Thus electric power generation requires fresh water and fuel while the cooling tower requires fresh water for make-up and electricity. The steam plant requires fuel, make-up water and electric power. Using the values indicated in Figure 2, it is possible to reduce the entire utility requirement to a fuel and water demand.

Table II contains the equivalent energy requirement for each section of the fermentation ethanol plant as calculated from Figure 2. Values are presented in terms of both Btu's consumed per gallon of ethanol produced and Btu's consumed per bushel of corn fed to the plant. For the alcohol producing portion of the plant the equivalent energy requirement is 107,920 Btu's per gallon of ethanol produced. The portion of the plant associated with the by-product grain production consumes 63,220 Btu's per gallon of ethanol produced. Energy content of products produced in the plant is also contained in Table II. The values reported for chemical products are lower heating values since it is felt that this is a more realistic representation of the actual energy produced in using such materials as fuel. For the distiller's by-product grains, the digestible energy is reported. It is felt that this figure is more consistent with the use of this product as a cattle feed than is the lower heating value.

As dictated by the second law of thermodynamics, the net energy production (energy produced minus energy consumed) in the plant is negative. However, the complete evaluation of the net energy production associated with grain alcohol production requires that we also carry out an analysis of the energy associated with the farming operation in which the corn is produced.

FARMING OPERATION

Pimentel et. al. (3) have made a careful analysis of the energy consumption in 1970 for planting, growing, drying and transporting corn to market. In making this analysis they have in effect gone back to the petroleum products and petrochemicals used in farming and the energy contained in the seed corn. We have modified their values to reflect the use of lower heating values in order to be consistent with the evaluation of the fermentation alcohol plant. The energy required to construct and repair tractors, trucks and other farm machinery was excluded since comparable figures for the construction and repair of process equipment in the alcohol plant were not included.

Table III contains the energy values for the farming operation in

Btu's per gallon of ethanol produced and Btu's per bushel of corn fed to the alcohol plant. The total farming operation consumes 45,986 Btu's per gallon of ethanol produced. Also included in this table are the energy values for the corn produced and for the stalks, cobs and husks. The digestible energy of the corn is reported because it is felt that the alternate utilization of the corn would be as cattle feed. The lower heating value of the cobs, stalks and husks, has been estimated from information published by Miller (1).

Thus for the farming operation it appears that the energy production is over six times as great as the energy consumption. Of course, this is not in violation of the laws of thermodynamics, since the excess energy has come from the sun and been converted to plant material through photosynthesis. The efficiency of photosynthesis has been calculated from the solar energy flux and the energy figures reported here and found to be approximately 0.9%, a reasonable figure.

NET ENERGY ANALYSIS

Table IV contains the overall energy balance for the farming and grain alcohol production operations. The total energy production from ethanol, aldehydes, fusel oil, corn stalks, cobs and husks is 242,494 Btu's per gallon of ethanol produced, while the energy consumption in the farming operation, alcohol plant, and the transportation of stalks cobs and husks to the plant site is 155,466 Btu's per gallon of ethanol produced. The net energy production is the difference in these two values or 87,028 Btu's per gallon of ethanol produced.

The processing associated with the production of distiller's dried grains and solubles is not included in the above energy analysis since it is not directly related to the production of ethanol, but is rather a by-product recovery operation carried out for economic reasons. The net energy loss associated with the by-product grain production is 18,170 Btu's per gallon of ethanol as shown in Table IV.

The energy value of the corn stalks, cobs and husks contained in Table IV is for the total production of these components. Actually, it would be practical and desirable to collect about 75% of this material leaving the remainder in the field for purposes of soil conditioning. If this were done and again if the net energy deficit of the by-product feed production is not included in the analysis then the net energy production is 45,575 Btu's per gallon of ethanol (118,210 Btu's per bushel of corn). If the energy deficit for the by-product production is included in the analysis there is still a net energy production of 27,405 Btu's per gallon of ethanol (71,090 Btu's per bushel of corn) which is approximately 36% of the lower heating value of a gallon of anhydrous ethanol.

CONCLUSIONS

From an analysis of the energy requirements associated with the production of corn in an average farming operation and the energy requirements necessary to convert this corn to anhydrous grain alcohol it appears that if 75% of the stalks, cobs and husks are used as an energy source that there will be a net energy production of at least 27,405 Btu's per gallon of ethanol produced. If the energy consumption associated with the preparation of distiller's by-product grains is not included (since it is not a necessary part of the grain alcohol

production) then the overall net energy production is at least 45,575 Btu's per gallon of ethanol produced. This ability to have a net energy production associated with the total process is the result of harnessing solar energy through photosynthesis. Thus the potential actually exists to extend our automotive fuel energy supply through the addition of grain alcohol produced by grain fermentation. Ethanol synthesized from hydrocarbons via ethylene, however, must be accompanied by a net energy loss (second law of thermodynamics).

The amount of ethanol that will ultimately find use as an automotive fuel additive will depend on other factors in addition to the net energy production associated with its manufacture. Results of other research work (4,5) indicate that such usage may be desirable and economically practical in the future.

LITERATURE CITED

1. Miller, D. L., "Agriculture and Industrial Energy," Proc. 8th Nat'l. Conf. on Wheat Util. Res., U.S. Dept. Ag., Pub. ARS W-19, Albany, CAlif., Sept. 1974, pp. 106-109.

2. Nebraska, Univ. of, "The Development of a High Protein Isolate from Selected Distillers By-Products," Final Report on NSF Grant No. AER74-10456 A01, July 1975, pp. 68-105.

3. Pimentel, D., Hurd, L.E., Bollotti, A.C., Forster, M.J., Oka, I.N., Sholes, O.D., Whitman, R.J., "Food Production and the Energy Crisis," Science 181, 443-449 (1973).

4. Scheller, W.A., Mohr, B.J., "Performance of an Ethanol-Gasoline Blend in Automobiles and Light Trucks," Amer. Chem. Soc. Div. of Fuel Chem. Prprts., 20, No. 2, 71-75 (1975).

5. Scheller, W.A., Mohr, B.J., "Production of Ethanol and Vegetable Protein by Grain Fermentation," ibid, 20, No. 2, 54-58 (1975).

6. Scheller, W.A., Mohr, B.J., "Protein Concentrates from Distillers By-Products," Proc. 9th Nat'l. Conf. on Wheat Util. Res.," U.S. Dept. Ag., In Press.

Table I
Utility Consumption for
the Production of Ethanol by
the Fermentation of Corn

Alcohol Plant	Per Bu. Corn	Per Gal.EtOH
Steam (50 psig),lb.	118.2	45.6
" (15 psig),lb.	75.6	29.2
Cooling Water (25°F Rise),Gal	43.6	16.8
Electric Power, Kw-Hr.	5.46×10^{-1}	2.10×10^{-1}
Benzene, lb.	3.11×10^{-3}	1.20×10^{-3}
By-Product Cattle Feed		
Steam (50 psig, lb.	85.7	33.0
Cooling Water (25°F Rise), Gal	286.4	110.4
Electric Power, Kw-Hr	2.54×10^{-1}	9.80×10^{-2}
Coal (10,000 Btu/lb), lb.	4.86	1.87

Manpower - 5 shift positions plus 5 unclassified personnel

Table II
Energy Consumption and Production
In the Manufacture of Ethanol by
the Fermentation of Corn

Energy Consumption In a Fermentation Ethanol Plant

Plant Section	Btu/Bu.Corn	Btu/Gal.EtOH
Liquid Concentration	113,120	43,610
By-product Grain Drying	50,860	19,610
Subtotal, By-products	163,980	63,220
Grinding, Cooking, Propagation	62,680	24,160
Fermentation	1,460	560
Beer Still and Centrifuge	104,830	40,420
Distillation	74,100	28,560
Dehydration	36,890	14,220
Subtotal, Ethanol	279,960	107,920

Energy Content of Products From a Fermentation Ethanol Plant

Item	Btu/Bu.Corn	Btu/Gal.EtOH
Ethanol, 1)	196,108	75,600
Aldehydes, Fusel Oil, 1)	2,802	1,080
By-product Grains, 2)	116,860	45,050
	315,770	121,730

1) Lower heating value. 2) Digestible energy.

Table III
Energy Consumption and
Production in Corn Farming

Energy Consumption in Corn Farming

Item	Btu/Bu. Corn	Btu/Gal.EtOH
Seed Corn	2,915	1,124
Fertilizer	51,700	19,930
Herbicide & Insecticide	1,077	415
Gasoline	37,231	14,353
Electricity	15,178	5,851
Irrigation	1,645	634
Labor	240	93
Drying	5,876	2,265
Transportation of Corn	3,427	1,321
Total	119,289	45,986

Energy Content of Products From Corn Farming

Item	Btu/Bu.Corn	Btu/Gal. EtOH
Corn, 1)	341,750	121,740
Stalks, Cobs, Husks, 2)	430,127	165,814
Total	771,877	297,554

1) Digestible energy. 2) Lower heating value.

Table IV
Overall Energy Balance
For Grain Alcohol Production From Corn

Energy Production	Btu/Bu.Corn	Btu/Gal.EtOH
Ethanol	196,109	75,600
Aldehydes, Fusel Oil	2,802	1,080
Stalks, Cobs, Husks	430,127	165,814
Total	629,038	242,494
Energy Consumption		
Farming Operation	119,289	45,986
Transportation of stalks, etc.	4,047	1,560
Alcohol Plant	279,960	107,920
Total	403,296	155,466
Net Energy Production	225,742	87,028
Net Energy Loss		
By-product Grain Production	47,120	18,170

$$\text{Total Power } P_T \text{ (kw)} = 1.05(P_o + .00105S_o + .0706CW_o)$$
$$\text{Total Fuel (Btu/Hr)} = 10{,}000P_T + 1.32S_o\Delta H$$

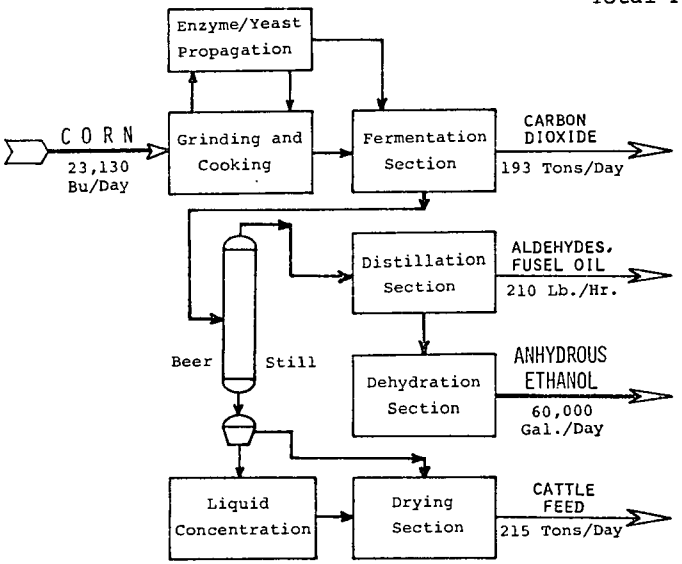

Figure 1 - Process Block Flow Diagram for a Fermentation Ethanol Plant.

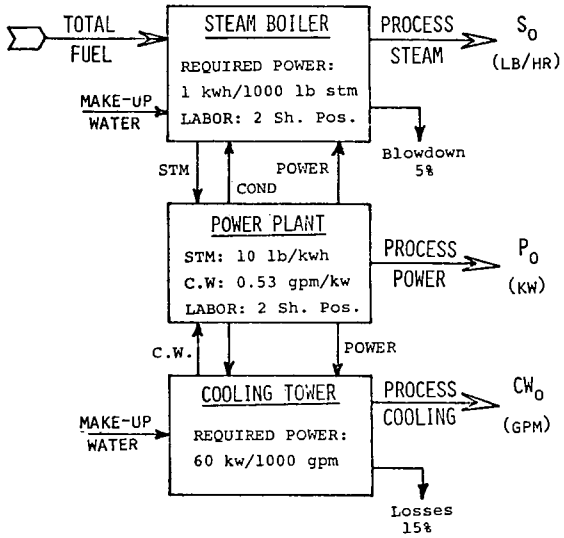

Figure 2 - Block Flow Diagram for the Utility - Fuel Relationship.

EFFICIENCIES OF METHANOL PRODUCTION FROM GAS, COAL, WASTE OR WOOD

Thomas B. Reed

Massachusetts Institute of Technology, Lincoln Laboratory,
Lexington, Ma. 02173

ABSTRACT

In the practical operation of methanol plants using natural gas, an efficiency of 50-65% is achieved, depending on the degree of waste heat recovery. The production of methanol only from coal has an estimated efficiency of 41-55%; but if methane and coal liquids are produced simultaneously, the overall process efficiency can climb to 75%. Waste and wood can also be used as energy sources. Conversion from these sources to methanol is likely to be somewhat less efficient because the plants will be smaller. However, several new processes for gasification and synthesis are being developed which may significantly increase these efficiencies.

The above values are first-law efficiencies measuring the ratio of the combustion energy of the product relative to the input energy. The second-law efficiency, based on free-energy conversion efficiency, is a more fundamental measure of the degree of effectiveness of any process; and it is applied here to several of the steps in methanol manufacture. Data are presented on the free energy of formation, combustion, gasification and reaction for chemical steps of interest in methanol manufacture. The second-law efficiency of methanol manufacture is several percent higher than the first law efficiency.

This work was sponsored by the Methanol Division of the MIT Energy Laboratory.

Introduction

Methanol has become a prime candidate for a clean synthetic liquid fuel to replace our dwindling oil and gas supplies(1-3). It is presently made in the U. S. from natural gas; but it can also be made from coal, waste or wood, and the yield can be greatly increased by using waste heat from a nuclear plant. We discuss in this paper the reported overall energy efficiency of manufacture from these various sources and analyse the energy consumption of the various steps. We will also discuss new methods of estimating efficiency and potential improvements in the various steps.

In practice, methanol plants are built to maximize profits rather than to minimize energy consumption. This may seem to make an analysis of energy consumption academic. Yet the efficiency of each step and the net efficiency must be understood before subsequent technical and economic choices can be made in planning. Now that energy is becoming less plentiful, it is very important that we keep good books on energy consumption.

CHEMICAL SYNTHESIS OF METHANOL

Methanol is generally produced from synthesis gas (syn-gas), a mixture of hydrogen and carbon monoxide, made by partial combustion of organic fuels such as gas, coal or wood. Table I lists the standard free energies of formation of species important in the manufacture of syn-gas and methanol. The available data (4-6) have been fitted to the linear equation $\Delta G = \Delta H - T\,\Delta S$ where the constants ΔH and ΔS give the best fit to the available data. This greatly simplifies calculations of free energy, equilibrium constants or efficiencies with very little loss of accuracy (6). Data on the free energy of combustion are also presented in Table I. The values for ΔH_c° and ΔG_c° can be used in calculating first and second law efficiencies.

Four routes for methanol synthesis have been considered in the literature, and these are shown in Table II along with the standard free energies of the reactions, where these are available. In practice only the first two routes, catalytic reduction of carbon oxides by hydrogen, are used commercially (7,8). The equilibrium concentration of methanol, x_M, formed in reaction (II-1) is shown in Fig. 1 for various pressures and temperatures. The reaction takes place over a chrome-zinc oxide catalyst at 300 atm between 300 and 400°C (Vulcan Cincinatti and Lurgi Process) or over a copper oxide catalyst at 50-100 atmospheres between 250 and 350°C(ICI Process). Because the reaction is highly exothermic, great care is taken to prevent overheating of the catalyst bed. The excess heat of reaction is usually recovered to make steam to drive the turbine compressors, and indeed some methanol plants generate excess electric power(9).

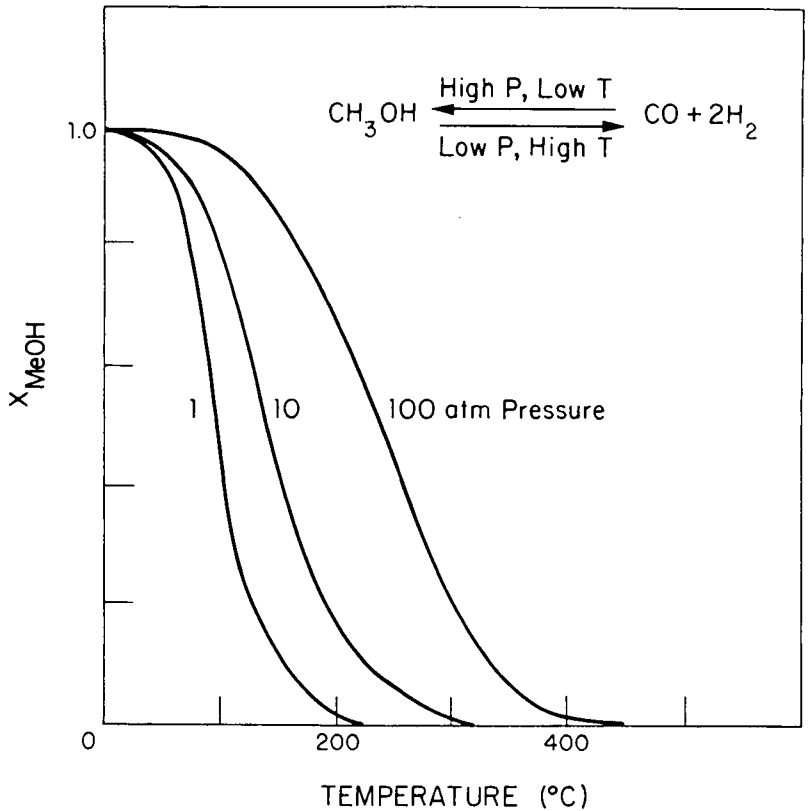

METHANOL CONVERSION vs TEMPERATURE AND PRESSURE

FIGURE I

Depending on the catalysts used, other alcohols will be produced in, a mixture called "methly-fuel"(10). These improve the fuel value of the methanol, but it is not clear whether the excess hydrogen required can be justified on an energy efficiency basis. The use of iron catalysts and lower pressures can also produce hydrocarbons as well (Fischer-Tropsch Process), but this process has a low energy efficiency because the oxygen in the synthesis-gas is reduced to water by some of the hydrogen(7).

Excess hydrogen is often used to remove heat from the catalyst bed. A new three-phase methanol reactor is being developed by Chem Systems (11,12) in which the gases are disolved in an oil that fluidizes the catalyst and removes heat. It is reported that 12% of a Lurgi syn-gas or 20% of a Koppers-Totzek (KT) gas were converted to methanol in a single pass at 60 atm and 235°C compared to conversions of 4-5% per pass in present reactors.

Gasification and Gasifiers

Table III lists the principal routes for the manufacture of syn-gas. At present syn-gas is made in the U. S. primarily by the steam reforming of natural gas according to Eqn. (III-3) at 15-20 atm and 850°C.This reaction is highly endothermic and requires a large capital investment in heat exchangers that operate at high pressure and elevated temperatures. The cost of the steam reformer is typically 41% of the total plant cost(13). It can be seen from Eq. (III-3)that an excess of hydrogen is produced and this excess can be used to make ammonia or alternatively, CO_2 can be added to the syn-gas to make more methanol as shown in Eq. (II-2). Methanol is presently made in some countries by the gasification of naphtha, or heavy hydrocarbon residues, according to Eq. (III-5)

Other primary energy sources will have to be found for methanol manufacture as our oil and gas supplies are depleted. Fortunately a wide variety of other feed stocks can be converted to syn-gas and thence to methanol, ammonia, or synthetic gasoline. For example, the water-gas reaction can be used to convert charcoal or coke to the equimolar syn-gas mixture commonly called water-gas. Unfortunately this reaction is highly endothermic, like steam reforming, and requires high-temperature heat exchangers or a revival of early water-gas reactors(7). Carbon can also be gasified with oxygen according to Eq. (III-2), resulting in the production of CO and a great deal of heat. These two reactions can be combined by gasification with a mixture of oxygen and steam in the ratio 0.61 to give an autothermic reaction.

Carbon is not a practical source of energy for syn-gas production. However coal and biomass are both very attractive, and both of these fuels fortunately contain some of the needed hydrogen as shown in Eqns. (III-6,7).

Gasifiers differ in the type of fuel used (coal,

Table I - Standard Free Energy of Formation and Combustion of Species Important in Methanol Manufacture

Substance	ΔG_f^o (T) [a] kcal/mole	ΔG_c^o (T) [b] kcal/mole
1. CH_3OH (g)	-51,500 + 35.5T	-159,700 - 10.7T
2. CH_3OH (l)	-59,900 + 60.3T	-151,300 - 35.5T
3. H_2O (g)	-58,400 + 12.4T	0
4. H_2	0	-58,400 + 12.4T
5. CO_2	-94,400 + 0.0T	0
6. CO	-26,400 - 21.3T	-68,000 + 21.3T
7. C	0	-94,400 + 0.0T
8. CH_4	-19,600 + 22.1T	-191,600 + 2.7T
9. "CH_2" [c]	-3,200 + 22.2T	-149,600 - 9.8T
10. "Coal" [d]	-7,400	-58,900
11. "Wood" [e]	-11,400	-32,200

(a) The standard free energy of formation from the elements. Data from refs. (4-6) were fitted to a linear equation of the form $\Delta G = \Delta H - T\Delta S$ over the range 300 - 1200 K, so that the two constants in each equation are the effective values of ΔH_f^o and $-\Delta S_f^o$ over this range. Estimated accuracy ± 0.5 kcal. The free energies of combustion and other reactions can be calculated from these values.

(b) The free energy for the combustion to CO_2 and H_2O (g). This is the low free energy of combustion (analogous to the low heating value for the fuel, LHV). The high free energy of combustion is calculated by adding -9,700 + 26.0T to the equation given above for each mole of water in the combustion products.

(c) The limiting value for parafinic hydrocarbons, C_nH_{2n+2}, at high n.

(d) The natural substances coal and wood have varying properties; the value of ΔH_f^o and ΔH_c^o given here is for the Clifty Creek No. 6 high-volatile bituminous coal of Ref. 23 used for column 3 of Table 4 in this report. The molecular formula calculated from the ultimate analysis is $C_{0.54}H_{0.45}S_{0.01}N_{0.01}$.

(e) For a wood of formula $C_{0.32}H_{0.46}O_{0.22}$, Δg_c = 4.242 cal/g in "International Critical Tables", Vol. II, p. 131.

Table II

Standard Free Energies for Methanol Synthesis Reactions

Reaction	$\Delta G_r^o(T)$ kcal/mole
1. $2\ H_2 + CO \rightarrow CH_3OH\ (g)$	$-25,100 + 56.8T$
2. $3\ H_2 + CO_2 \rightarrow CH_3OH\ (g) + H_2O\ (g)$	$-15,500 + 47.9T$
3. $CH_4 + SO_3 \rightarrow CH_3OH + SO_2$	$-9,300 - 29.2T$
4. $CH_4 + 1/2\ O_2 \rightarrow CH_3OH\ (g)$	$-31,900 + 13.4T$
5. $CO + CH_3OH \rightarrow \quad + H_2 \rightarrow 2\ CH_3OH$	-
6. "CH_2" $+ H_2O \rightarrow CH_3OH\ (g)$	$-10,100 + 0.9T$

Table III - Gasification Reactions

Reaction	$\Delta G_r^o(T)$ kcal/mole
1. $C + H_2O\ (g) \rightarrow CO + H_2$	$32,000 - 33.7T$
2. $C + 1/2O_2 \rightarrow CO$	$-26,400 - 21.3T$
3. $CH_4 + H_2O\ (g) \rightarrow CO + 3\ H_2$	$51,600 - 55.8T$
4. $CH_4 + 1/2\ O_2 \rightarrow CO + 2H_2$	$-6,800 - 43.4T$
5. "CH_2" $+ H_2O \rightarrow CO + 2H_2$	$35,200 = 55.9T$
6. Coal $+ O_2$, $H_2O \rightarrow CO$, H_2	-
7. Wood $+ O_2$, $H_2O \rightarrow CO$, H_2	
8. $CO + H_2O \rightarrow CO_2 + H_2$	$-9,600 + 8.9T$

Table IV - Material and Energy Balance for 5000 ton/day

Methanol Production from Coal

Gasifier	Koppers-Totzek	Winkler	Lurgi
Coal	Eastern High Volatile Bit A	Western Sub-bituminous	Western Sub-bituminous
Heat Content BTU/lb	10,690	8640	8870
Consumption - ton/day	8260	11690	20670
Fuel Energy - 10^9BTU/day	177	202	367
Aux. Energy "	35	35	94
Aux. Coal ton/day	1650	2040	5280
Oxygen ton/day	6700	5000	5500
Methane 10^6SCF/day	0	0	185
Tars, oils, phenols t/day	0	0	1860
Energy in products 10^9BTU/d	98	98	344
Process Efficiency %	46	41	75

lignite, waste or wood), in the sizes and amount of fuel they can gasify (0.1-500 tons/day), in the pressure of operation (1-20 atm pressure) and in the method of fuel suspension (fixed bed, suspended particles or fluidized bed). Manufactured gas was in widespread use until pipelines brought natural gas from Texas. Germany and especially Sweden have made synthetic gas and fuels from coal and wood during World War II, so that most of the above combinations of conditions exist or have existed in commercial gasifiers(7,14,15). Oxygen gasifiers typically operate with an efficiency of 65-90% (7), while air gasifiers can be up to 95% efficient.

In addition to many experimental gasifiers under investigation in this country there are three commercially available models that have been in use since World War II: the Lurgi, the Winkler, and the Koppers-Totzek (KT). In methanol production the gasifier is operated as part of a larger process, and the efficiency is not measured independently.

Recently the Union Carbide Corporation has developed an oxygen gasifier for municipal waste under the name Purox. In this system, one ton of waste is gasified with 0.2 tons of oxygen, yielding 0.22 tons of clean, granular residue, 0.7 tons of gas, and 0.28 tons of water. The resulting gas is 26% H_2, 40% CO, 23% CO_2 and 5% CH_4, and contains 370 BTU/SCF. Of the 9.5 MMBTU contained in a ton of waste, 7.5 MMBTU are contained in this gas. One million BTU of thermal energy are required to make the oxygen, so that the net energy efficiency of gas production is 68%(16).

Carborundum Corporation has also developed a gasifier for municipal waste that uses preheated air, the Torax gasifier. Battelle has developed an air gasifier for cellulosic wastes that they estimate to be 85% efficient (17). A number of biomass gasifiers are in the development stage (18).

The Thagard Oil Co. has recently announced a reactor capable of operation to 6000°F. It is claimed that carbon-containing feedstocks can be gasified for a fraction of the cost of conventional gasifier operation(19,20).

Gas Preparation

After the raw syn-gas is produced, it must be cleaned of all traces of sulfur, since methanol catalysts are sensitive to sulfur. Then the required hydrogen/carbon-monoxide ratio is established according to the water-gas shift reaction, Eq. (III-8).

Efficiency of Methanol Manufacture

It is customary to define the net energy efficiency of present and projected methanol plants as the ratio of the energy in the products, E_p, to the energy in the fuel and that required to generate auxiliary inputs (such as

electricity and oxygen), E_f and E_a,

$$\eta = E_p/(E_f + E_a) \quad (1)$$

$$\eta = \Delta H^\circ_p/(\Delta H^\circ_f + \Delta H^\circ_a) \quad (2)$$

The product and fuel energies are usually given as the low heat of combustion of these fuels. These are the ΔH°_c values found in Table I. The auxilliary inputs are given as the thermal equivalent of electric power used. Since large plants produce their own electricity and oxygen, generally from the same fuel (gas, coal, etc.) used to make the methanol, this estimate is both simple to make and reliable. We list here the efficiency of methanol manufacture as reported by various sources.

Natural Gas: R. McGhee (Transco) (13) reports that gas plants have improved their efficiencies from about 25% in the 1930s to 50-60% for modern, large-scale plants. Much of this efficiency increase in plants making more than 200 tons/day of methanol is due to the operation of centrifugal compressors with steam generated from the exothermic heat of reaction (II-1). D. Wentworth of Vulcan-Cincinatti has reported that the high pressure process, leading to methanol containing higher alcohols (Methyl-Fuel), is 63-69% efficient(21). Again it should be stressed that these are not necessarily the maximum attainable efficiencies, but represent an economic compromise in plant construction.

The largest plants presently operating today make 2000 tons/day of methanol, but the largest single-train plant possible to construct with available equipment will make 5000 tons/day of methanol. Plants have been proposed with five trains making 25,000 tons/day of methanol from either natural gas or coal. All the methanol plants in the U. S. today produce together about 10,000 tons/day or a billion gallons/year.

Coal: B. Harney reports a coal-methanol plant operated in Texas in 1955 making 300 tons/day of methanol (22); but this plant was converted to natural gas in 1956, and all plants in the U. S. have since run on natural gas because of its low cost. Recently a number of estimates of costs for large coal-methanol plants have been made. The efficiency of operation must be estimated in order to make these calculations, and a number of these have appeared in print.

During Project Independence, a large group from the AEC interviewed many industrial companies to estimate the cost of making methanol from coal in large plants(23). The estimated plant efficiencies for various methods of gasification of several coals are shown in Table IV, where it can be seen that the efficiency varies between 41 and 75% depending on the production conditions and whether methanol is produced alone or in combination with methane and coal liquids (co-products).

During the gasification of coal, some gasifiers (such as KT and Winkler) produce only CO and H2. Others, such as

Table V - Efficiency of Manufacture of Synthetic Fuels

Fuel[a]	From Shale	Coal Liquefaction	Lurgi
Gasoline	55%	65%	-
Gasoline plus distillate	65	70	-
Methanol	-	-	65%

(a) Does not include energy consumed in producing primary fuel, estimated to be 80-90% efficient for strip mining and 60% efficient for room and pillar shale mining.

(b) Assumes tars, oils from Lurgi gassification used for process heat, otherwise 55% efficient.

Table VI - Efficiency and Cost of SASOL type Synthetic Fuel Production from Coal[a]

Fuel	Primary Eff. %	Total Eff. %	Costs[b] Plant - $MM	Costs[b] Product $/MMBTU	Product[c] tons/day
Methanol	39	56	472	1.80	69
Gasoline	21	41	505	3.05	50
SNG	53	68	365	1.13	78
Low BTU gas	63	71	218	0.86	83

(a) From study Ref. 27.

(b) In 1975 dollars using modified Panhandle Easter accounting, plants burning 20-30,000 tons/day coal

(c) Based on published SASOL technology using Lurgi gasifier

Table VII- Second Law Efficiency of Methanol Production from Methane or Petroleum Feedstocks (Assumed First Law Efficiency 0.60)

	Heat of Combustion ΔH_c^o	Free Energy of Combustion ΔG_c^o	First Law Efficiency η	Second Law Efficiency ε
CH_3OH	-151.3	-161.9		
CH_4	-191.6	-190.8	0.60	0.64
"CH_2"	-149.6	-152.5	0.60	0.63

the Lurgi gasifier, produce sizable quantities of methane and coal chemicals as well. In Table IV it is seen that if these products can be used, the total conversion efficiency is as high as 75%, while much lower efficiencies result for single-product processes.

From data obtained on a Lurgi type gasifier, R. McGhee of Transco projects a conversion efficiency of 54% for the production of methane alone. If the methane produced naturally in gasification is used as is and if the balance of the coal is converted to methanol, the overall efficiency is projected to be 52%. If the coal-tar liquids can be used as well, the efficiency increases to 61%(24).

In a recent study for the EPA, the EXXON staff estimated the efficiency of production of synthetic gasoline, distillate, and methanol from shale and coal. Their results are shown in Table V. The efficiencies for methanol production are based on established technology, while production from shale and coal liquifaction are in the development stage. The efficiencies of production of the primary fuels were also estimated in this report as 60% for room and pillar shale mining and 80-90% for coal mining(25).

In Germany in 1938, 58% of the motor fuel was synthetic, manufactured from coal, wood, and agricultural products(26). About half of this production was gasoline made from brown coal with the Fischer-Tropsch synthesis. This technology was transferred after the war to the SASOL Corporation in South Africa where it is now being greatly expanded. In a recent study, F. K. Chan of Kellogg Corp. has used published SASOL data to estimate the efficiencies and costs of making various synthetic fuels (27). His results are shown in Table VI Since the SASOL process uses Lurgi gasification, the efficiency is high only when coproducts are produced.

The manufacture and use of methanol as a fuel has been examined in considerable detail in a recent study (28) by the West German Government. It projects a requirement of 1.46 tons of hard coal, 5.37 tons of lignite, or 1120 cubic meters of natural gas per ton of methanol synthesized. These figures correspond to thermal efficiencies of 46% for coal and lignite and 55% for natural gas. The fuel requirement can be greatly reduced if the plant is coupled to a nuclear plant for process heat.

Waste and Wood: The possible manufacture of methanol from municipal waste is a potentially attractive solution for both our waste disposal and energy shortage problems. The City of Seattle has explored various disposal schemes and finds that the manufacture of methanol or ammonia, depending on market conditions, offers the most economical method of waste disposal, even though it also requires the largest amount of capital (29). In a study for the City it is estimated that 1500 tons/day of waste can produce 1000 tons/day of synthesis-gas which in turn will produce 275 tons/day of methanol at a cost of 19,000 kwh of electric

power. The net energy efficiency estimated from these imputs is about 34% (30). Methanol has never been made from waste or wood, but no problems are apparent in doing so, since these fuels can be gasified to syn-gas. In fact cellulosic type fuels have typically less than 0.1% sulfur whereas coal has 2% or more. Methanol catalysts are particularly sensitive to sulfur, so this is an advantage. The efficiencies of conversion should be comparable, on an energy basis, to those predicted above for coal. It is estimated that 1 ton of methanol (17 MMBTU/ton) can be made from 3 tons of dry wood (16 MMBTU/ton) or 5.1 tons of waste (typically containing 9 MMBTU/ton) based on a conversion efficiency of 37%. However efficiencies could be significantly higher or lower depending on plant size and degree of heat recovery (31).

Second Law Efficiencies

So far we have been discussing what can be called a first law efficiency of methanol conversion, gasification, etc. which is defined in Eq. (1) as the ratio of the energy content of the products to the energy inputs. This criterion can be misleading. It is possible to convert between chemical, electrical and mechanical energy with an efficiency approaching 100%. However we cannot convert thermal energy to the other forms without losing a fraction $(T_2 - T_1)/T_2$ when we use a heat engine. In converting other energy forms to thermal energy, we can gain the fraction $T_1/(T_2-T_1)$by using a heat pump. These relations are illustrated in Fig. 2.

The second law efficiency has been defined (32-35) as

$$\epsilon = \frac{\text{(heat or work usefully transferred by a device)}}{\text{(maximum heat or work transferrable by any device)}} \quad (3)$$

In examining chemical processes, the change in Gibbs free energy, ΔG, accompanying a chemical process is the proper measure of chemical energy consumed or produced in that reaction and determines the maximum efficiency of the production of chemical, electrical or mechanical energy.

For the conversion of primary fuels to synthetic fuels, we define the second law efficiency as the ratio of the free energies of combustion (at 300K) of the products to those of the inputs,

$$\epsilon = \Delta G_c^\circ(\text{products})/\Delta G_c^\circ(\text{fuel}) \quad (4)$$

(where ΔG_c° is the free energy of combustion of the primary fuel, whether it is used as a feedstock or for auxilliary energy production.)

The values of ΔH_c° and ΔG_c° at 300K are shown in Table VII for methanol and several primary fuels. It can be seen that the free energy of combustion of methanol is significantly higher than the heat of combustion, while for

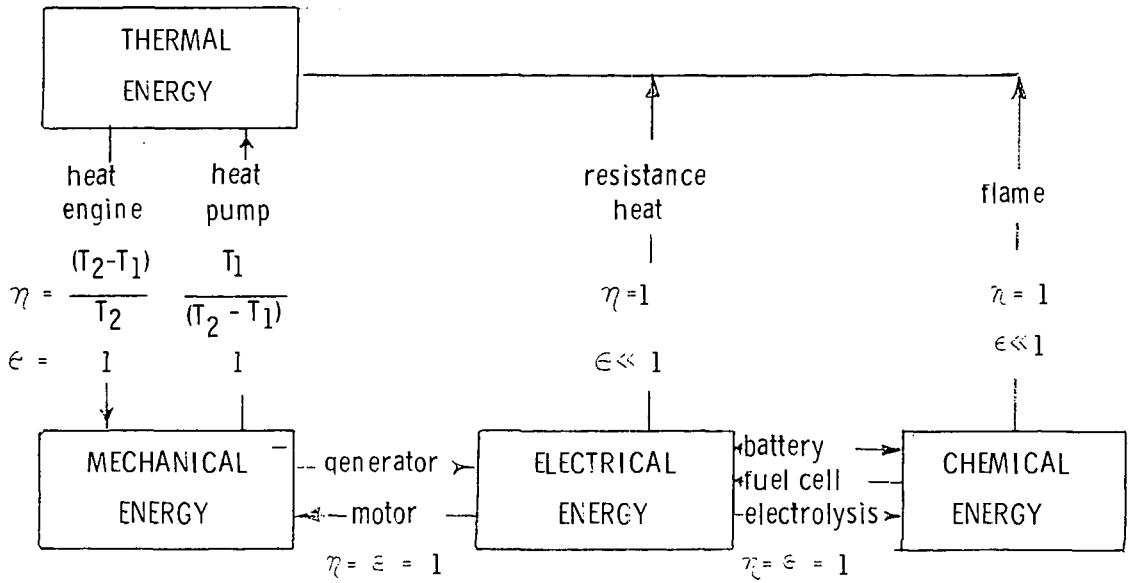

Fig. 2 - Maximum first and second law efficiencies for various energy conversions

FIGURE 2

the primary fuels, these quantities are approximately equal. The overall second law efficiency of methanol production from methane or petroleum is compared to an assumed first law efficiency of 0.60 in Table VII. The second law efficiency is several percent higher and this is due to the large entropy term in the free energy of combustion of methanol.

The formation of methanol is highly exothermic (Eqs. II-1,2,4,6) which would at first suggest that a great deal of energy is lost in conversion from other fuels. It is precisely because the heats of combustion do not determine efficiencies that in fact practical synthesis of methanol is relatively efficient. Although a great deal of heat is produced at various stages in processing, this heat can be recovered as work for compression and appears in the methanol as recovered free energy.

Although the use of second law efficiencies does not greatly change the overall conversion efficinecy in methanol production, it gives much more insight into the separate steps of production and points up the areas where improvements can be made. A few examples will make this clearer.

Since gasification of feedstocks generally leads to a ratio, R = H2/CO different from that of 2 required for methanol synthesis, it is necessary to perform the watergas shift reaction, Eq. (III-8) on the raw syn-gas, and this reaction consumes a quantity of free energy calculated as follows. The free energy of any reacting mixture is given by (36)

$$G = n_i \sum_i \mu_i \qquad (5)$$

where

$$\mu_i = \mu_i^\circ + RT \ln X_i \qquad (6)$$

(Here μ_i is the chemical potential of each species, n_i is the number of moles of each species in the mixture, and X_i is the mole fraction of each species. If we take $x = H_2/CO$, as a measure of the degree of reaction, Eq. (5) becomes

$$G(x) - (G_{co} + G_{H_2O}) = x\,\Delta G_r^\circ + RT \ln P + 2RT\,(x \ln x + (1-x)\ln(1-x)) \qquad (7)$$

This free energy loss on reaction is shown as a function of the degree of reaction in Fig. 2 for a total pressure of 1 atm at 500K and 1000K. Note that even for x = 0 there is a change from the standard free energy of the reactants due to the initial mixing of the reactants. Then as the reaction proceeds, there is a further decrease in free energy due to both enthalpy production and further mixing of the product gases. The free energy reaches a minimum at a value x determined by the equilibrium constant.

From this graph it is possible to calculate the free energy cost of going from any initial ratio R to the value

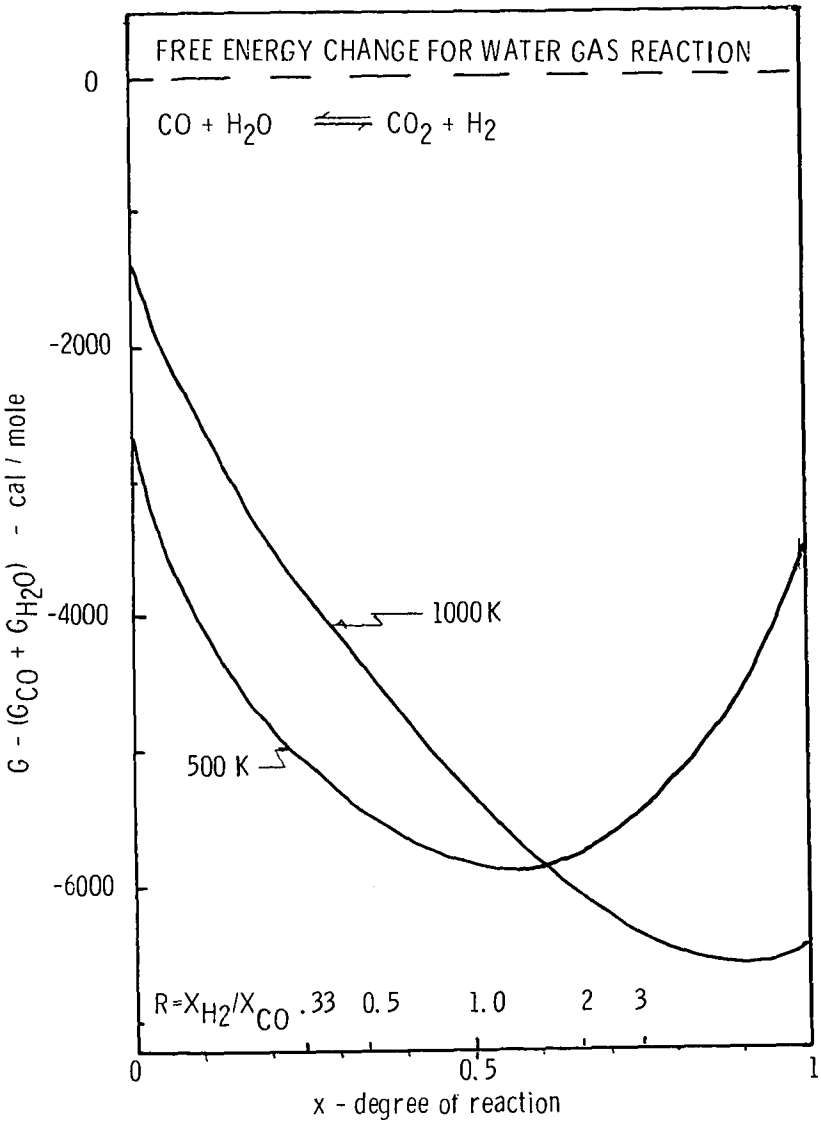

Fig. 3

FIGURE 3

R=2 required for methanol synthesis. For instance, starting with R = 1, the free energy decreases from -5300 to -6100 or about -800 cal per mole of mixture (-2400 cal/mole of syn-gas, R = 2) at 1000K.

Oxygen is often used for the gasification reactions of Table III. The first law gives no value for the efficiency of separation of oxygen from air, since the heat content of the separated O and N is the same as that before separation. For the reaction

$$\text{Air} \longrightarrow 0.21\ O_2 + 0.79\ N_2 \qquad (8)$$

the free energy change from Eq. (5) is given by

$$\Delta G = RT\ (0.21 \ln 0.21 + 0.79 \ln 0.79) \qquad (9)$$

This can be easily compared to the electrical or thermal energies required to operate an oxygen plant. According to one manufacturer, 240 kwh are required to produce a ton of oxygen, while from Eq. (8) we calculate a minimum requirement at 300K of 48.1 kwh/ton, yielding an efficiency of 20%. (This converts to 7% thermal efficiency if one assumes an efficiency of 33% for power generation). Gyftopoulis et al (36) derive a second law efficiency of 17% for an oxygen plant making 380 tons/day of oxygen. efficiency of the process.

It is hoped that this brief discussion will encourage the use of second law efficiencies to analyse the various steps in methanol manufacture in second law terms to determine where improvements can be made using new processes and devices such as heat pumps and fuel cells now being developed.

ACKNOWLEDGEMENTS

We are glad to acknowledge the generous support of the Methanol Division by Mr. J. W. Hawley Jr.

Bibliography

1. Reed, T. B., Science 182, 1299 (1973).

2. Mills, G. A. and Harney, B. M., Chem. Tech. 4, 26(1974).

3. "Methanol as an Alternative Fuel," Vol. II, reprints of papers presented at Engineering Foundation Conference, Henniker, N. H., July 7, 1974.

4. "JANAF Thermochemical Tables," Second Edition, (D. R. Stull and H. Phophet, Eds) NSDRS-NBS 37, (June 1971).

5. "Selected values of Properties of Hydrocarbons," Circular C 461 of the National Bureau of Standards, (1947).

6. Reed, T. B., "Free Energy of Formation of Binary Compounds," MIT Press, Cambridge, Ma. (1971).

7. Kirk, R. D. and Othmer, D. S., Eds., "encyclopedia of Chemical Technology," (Interscience, New York, published 1964-1972.) See long articles on Methanol, Manufactured Gas, Gasification of Coal and Carbon Monoxide-Hydrogen Reactions.

8. Sherwin, M. B. and Frank, M. E., "Potential Long-Range Improvements in Methanol Manufacture," in Ref. 3.

9. Quartulli, O. J., Turner, W. and Towers, R., Petroleum and Petrochemical International 13, 49 (1972).

10. Duhl, R. W., "Methyl Fuel from Remote Gas Sources," in Ref. 3.

11. Sherwin, M. B. and Blum, D., "Methanol Synthesis in a Three Phase Reactor," paper at Am. Chem. Soc. mtng., Chicago, Ill., Aug. 24, 1975.

12. Burke, D. P., "Methanol," Chemical Week, 33 (Sept. 24, 1975).

13. McGhee, R. M., "Methanol Fuel from Natural Gas," in Ref. 3.

14. See for instance "Evaluation of Coal-Gasification Technology," Research and Evelopment Report No. 74, OCR contract 14-32-0001-1216; Refs. 17, 23, 28, this paper.

15. Detailed operating data contained in "The CO-H2 Synthesis of I. G. Farben," FIAT Report 1267, 1949; "Lurgi High Pressure Gasification," BIOS Final Report no. 521, item 30, 1949.

16. Fisher, T. F., Kasbohm, M. L. and Rivero, J. L., "The Purox system," Paper presented at AIChE Annual Meeting, Sept. 9, 1975, Boston, Ma.

17. Rohrmann, C. A., Mudge, L. K. and Hammond, V. L., "Methanol from Forestry, Municipal and Agricultural Organic Residues," in Ref. 3.

18. "Production of Chemical Feedstock from Wood Waste," Contract OSY4-0093, Pulp and Paper Research Institute of Canada, March 1975.

19. Thagard Co., "Unique Reactor Thrives at High Temperature," Chem. Eng., 64 (Oct. 27, 1975).

20. "Reactor Makes Cheap Feedstocks Valuable," Business Week, Nov. 10, 1975.

21. Wentworth, T., Environ. Sci. Technol. 7, 1002, (1973).

22. Harney, B. M., "Technological Aspects of Production of Methanol from Coal," in Ref. 3.

23. Jaffe, H., Endelman, F., Hightower, J. R., Berger, B., Crothers, W., Pasternak, A. and Carter, R., "Methanol from Coal for the Automotive Market," in Ref. 3.

24. McGhee, R. M., "Coproduction of Methanol and SNG from Coal," paper at Am. Chem. Soc. National Meeting, Chicago, Ill. Aug. 24, 1975.

25. "Feasibility Study of Alternate Fuels for Automotive Transportation," Exxon Staff, EPA-460/3-74-009 b, Vol. II, June 1974, p. 134.

26. Reed, T. B., "Use of Alcohols and Other Synthetic Fuels in Europe from 1930-1950," Paper presented to AIChE, Boston, Ma. Sept. 1974.

27. Chan, F. K., "Production of Fuels by a SASOL type Process,", EPA-650/2-74-07-072, July 1974.

28. Federal Ministry of Research and Technology, Bonn, Germany, "On the Trail of New Fuels - Alternative Fuels for Motor Vehicles," UCRL translation no. 10879 of "Neuen Kraftstoffen auf der Spur - Alternative Krafstoffe fur Kraftfahrzeug," Bonn, (1974).

29. Sheehan, R. G., "Methanol from Solid Waste," in Ref. 3.

30. Mathematical Sciences, N. W., "Feasibility Study on the Conversion of Solid Waste to Methanol or Ammonia," Seattle, Wa. (Sept., 1974).

31. Reed, T. B., "Biomass Energy Refineries for Production of Fuel and Fertilizer," Paper presented at Eighth Cellulose Conference, May 20-22, 1975 (TAPPI) Syracuse, N. Y.

32. Keenan, J. H., "Thermodynamics," John Wiley and Sons, New York, N. Y. (1941); MIT Press Cambridge, Ma. (1970).

"Efficient Use of Energy," (Ford, K. W. et al,

Bibliography

1. Reed, T. B., Science 182, 1299 (1973).

2. Mills, G. A. and Harney, B. M., Chem. Tech. 4, 26(1974).

3. "Methanol as an Alternative Fuel," Vol. II, reprints of papers presented at Engineering Foundation Conference, Henniker, N. H., July 7, 1974.

4. "JANAF Thermochemical Tables," Second Edition, (D. R. Stull and H. Phophet, Eds) NSDRS-NBS 37, (June 1971).

5. "Selected values of Properties of Hydrocarbons," Circular C 461 of the National Bureau of Standards, (1947).

6. Reed, T. B., "Free Energy of Formation of Binary Compounds," MIT Press, Cambridge, Ma. (1971).

7. Kirk, R. D. and Othmer, D. S., Eds., "encyclopedia of Chemical Technology," (Interscience, New York, published 1964-1972.) See long articles on Methanol, Manufactured Gas, Gasification of Coal and Carbon Monoxide-Hydrogen Reactions.

8. Sherwin, M. B. and Frank, M. E., "Potential Long-Range Improvements in Methanol Manufacture," in Ref. 3.

9. Quartulli, O. J., Turner, W. and Towers, R., Petroleum and Petrochemical International 13, 49 (1972).

10. Duhl, R. W., "Methyl Fuel from Remote Gas Sources," in Ref. 3.

11. Sherwin, M. B. and Blum, D., "Methanol Synthesis in a Three Phase Reactor," paper at Am. Chem. Soc. mtng., Chicago, Ill., Aug. 24, 1975.

12. Burke, D. P., "Methanol," Chemical Week, 33 (Sept. 24, 1975).

13. McGhee, R. M., "Methanol Fuel from Natural Gas," in Ref. 3.

14. See for instance "Evaluation of Coal-Gasification Technology," Research and Evelopment Report No. 74, OCR contract 14-32-0001-1216; Refs. 17, 23, 28, this paper.

15. Detailed operating data contained in "The CO-H2 Synthesis of I. G. Farben," FIAT Report 1267, 1949; "Lurgi High Pressure Gasification," BIOS Final Report no. 521, item 30, 1949.

16. Fisher, T. F., Kasbohm, M. L. and Rivero, J. L., "The Purox system," Paper presented at AIChE Annual Meeting, Sept. 9, 1975, Boston, Ma.

editors), AIP Conference Proceedings No. 25, American Institute of Physics, New York (1975).

34. Gyftopoulis, E. P., Lazaridis, L. J. and Widmer, T. F., "Potential Fuel Effectiveness in Industry," Ballinger Publishing Co., Cambridge Ma., (1974).

35. Berg, C. A., Science 181, 128 (1974).

36. Gaskell, D. R., "Introduction to Metallurgical Thermodynamics," McGraw-Hill, New York, N. Y. (1973).

SECOND LAW ANALYSIS, FOR PINPOINTING THE TRUE INEFFICIENCIES IN FUEL CONVERSION SYSTEMS

Richard A. Gaggioli and Peter J. Petit

Mechanical Engineering Department, Marquette University
Milwaukee, Wisconsin 53233

Introduction

Presented in this paper is the methodology for fundamental thermodynamic analysis of energy conversion systems. Examples are taken from representative coal gasification unit operations, to illustrate the method in the context of synfuel systems. Such analyses accurately pinpoint and evaluate the dissipations in a plant, as well as the efficiency of each device. Being a "second law" analysis, it is based on the concept called availability,* in contrast to the usual "first law" analysis which uses only the energy concept.

The results are not simply of academic interest; they are of real practical value in many ways, as the article discusses. Many engineering, administrative, executive and political decisions are made under the impressions -- misimpressions -- given by energy analyses. In a recent article, former Chief Engineer C. A. Berg (1) of the FPC stressed the necessity to apply availability analyses in lieu of energy analyses, in order to measure rationally the effectiveness with which fuels and resources are put to use; among other things, he points out examples of mismanagement resulting from the above-mentioned misimpressions. The Federal Energy Administration has recently supported several studies based on the second law (13,14); one of these studies, by physicists from Princeton and Michigan, was reported recently, in Science (22).

For some time prominent thermodynamicists (e.g. 5, 6, 15, 16, 17, 18) have proposed the more extensive use of availability analyses. One reason they have not been taken up enthusiastically is because the concept of availability itself has seemed abstract and difficult to understand, as a result of complex derivations, from obtuse statements of the second law. The causes of the complexity are historical -- quirks in the way thermodynamics evolved. But very significant progress has been made lately and thermodynamics, including availability, can now be presented in a very palatable manner, while making its practical importance and value much clearer.

The results of second law analyses are much more enlightening than first law (energy) analyses, because the dissipations and efficiencies measured with availability are the true ones, whereas those measured with energy are erroneous and misleading. What the scientist calls "energy" is not the resource society values. What the layman calls "energy" is that resource, but the layman's "energy" is synonymous with "availability."

When does the layman ascribe "energy" to a material? When it has a potential to cause change for him. But that which is called energy by the scientist is not this potential; our energy cannot be produced or destroyed. Therefore, if it were truly a resource it would be nondepletable. We cannot resolve this paradox by saying that "it is conserved, but it is degradable." Because, if energy loses

---

*Other words have been used as alternatives to "availability"; e.g., available energy, available work, useful energy, exergy, essergy and others -- including "potential energy", which will be used synonymously in this article.

potential to cause change for us then energy cannot be a measure of that potential. The only true resolution of the paradox is to realize that it is availability -- potential energy -- which is the rational measure of potential to cause change for us.

It is potential energy that is needed to make processes go; in so doing, it is literally used up -- not degraded, not converted, but used up (consumed).

"Energy converters", such as engines, take potential energy in one form and convert it, in part, to another form; the part which is not converted is used up to accomplish the conversion. We could say that the consumed portion "fuels" the conversion process.

The following article is broken down into (1) a summary of the fundamentals of thermodynamics, (2) a description of how these are applied, especially for the availability analysis of synfuel operations, (3) the results of the analysis of some coal gasification unit operations, and (4) the summary and conclusions, including a survey of results for other systems and economic sectors.

Thermodynamics -- Its Basic Implications

The basic concepts of Thermodynamics are the two commodities called Energy and, here, Potential Energy.* The basic principles are the First Law, dealing with energy, and the Second Law, dealing with potential energy.

To illustrate the basic concepts and principles, consider Figure 1, showing a conduit carrying some commodity. It could portray a transmission line through which electric charge is flowing with a current I_q (e.g., amperes = coulombs per second). Or, it might be a penstock carrying volumes V of high-pressure water at a current I_V (such as gpm = gallons per minute), perhaps headed for a hydraulic turbine. The conduit could be a pipeline carrying amounts n of a chemical such as H_2 at a current I_{H_2} (such as gram-moles/second). Or it could be a heat conductor carrying a thermal current I_θ. The conduit could be carrying any commodity.

Whatever the commodity might be, energy is carried concurrently with it. For examples, past any "station" along a transmission line, such as past the cross-section depicted in Figure 1, the rate P_E at which energy E flows past is proportional to the rate I at which the commodity flows past. If the commodity is charge, then we can write that the energy current -- the "power" -- is $P_E = \phi I_q$ where ϕ is the value of the electric potential at the "station." $P_E = \phi I_q$ can be called the rate of electric flow of energy, associated with the electric current I_q.

When a virtually incompressible fluid carries energy solely by virtue of being pressurized, there is a hydraulic flow of energy at the rate $P_E = pI_V$, where p is the pressure and I_V is the volumetric flow rate. When a material flows and carries energy not only because of its pressure but also becuase of its composition, the flow of energy can be called a chemical flow; e.g., if H_2 is flowing with a current I_{H_2} moles per second, $P_E = \mu_{H_2} I_{H_2}$ where μ_{H_2} is the chemical potential.

Notice that, in each of the above examples, the proportionality factor between the commodity current and the associated energy current (energy power flow) turns

---

*The commodity that we call potential energy, here, has gone by a variety of names, such as availability. The traditional "potential energy" -- that of a mass in a gravitational field, at an altitude above some reference datum ("ground") -- is one form of potential energy.

out to be the "potential" which drives the commodity current through the conduit. Stated more precisely, a difference in the potential, from one end of the conduit to another, causes the current to flow through the conduit.

Whatever the commodity is that is flowing -- and several may be flowing simultaneously -- there is a flow of energy associated with the flow of each commodity, and hence for each commodity there is a proportionality coefficient (like p or ϕ or μ_{H_2}) relating the associated energy current (i.e., power) P_E to the commodity current I.

The driving force which causes the thermal current is temperature difference; and, $P_E = TI_\theta$. Traditionally, in science and engineering, it is P_E which has been called the rate of heat flow. It would have been better to use the word "heat" for the commodity with current I_θ, but this commodity was not recognized until later; it is entropy.

Commodity Balances, and the First Law

In analysis of energy converters balances are applied -- implicitly, if not explicitly -- to the different converters for each of the relevant commodities; for examples, mass balances, energy balances, chemical compound balances, entropy balances, and so on. The amount of any given commodity in some container can in general be changed by either (1) transporting the commodity into or out of the container, or (2) production or consumption inside. Thus, on a rate basis {The rate of change in the amount of the commodity contained} = {The sum of all of the inlet rates} - {The sum of all of the outlet rates} + {The rate of production inside} - {The rate of consumption inside}. For the special case of steady operation, the amount of any content is constant, so that the rate of change of the content is zero. Then, the totals of the rates of influx and the productions equals the totals of the effluent rates plus consumptions.

Some commodities, like charge, cannot be produced or consumed; they are said to be conserved. The essence of the First Law is, of course, that energy is conserved; there is another aspect: the transport of any commodity has an associated energy transport, as illustrated by the foregoing discussions of currents in conduits.

The Potential to Cause Change for us: a Commodity

When does a commodity have the capacity to cause changes for us? The answer is: whenever it is not in complete, stable equilibrium with our environment. Then, it can be used to accomplish any kind of change we want, to some degree. Thus, charge has this capacity whenever it is at a potential different from "ground"; water has this capacity whenever it is at a pressure different from "ground."

Water in a tower has capacity to cause change for us; we could use it to cause any kind of change for us, to some degree. For example, we could use it to take charge -- of some limited amount -- out of the "ground" and put it on a given capacitor. Once the capacitor has been charged, the charge is now at a potential above "ground." Thus, it now has some of the capacity to cause change for us given up by the water. If we liked, we could use the capacity now residing in the capacitor to pump water back into the tower. But certainly no more water than was used to charge the capacitor. How close could we come to getting all that water back up? Clearly that depends on (1) how efficiently we did the task of transferring the water's original capacity to the charge -- on what fraction of the original capacity was ultimately transferred to the charge and on what fraction was consumed to accomplish that transfer, and in turn, (2) how efficiently we transfer the charge's capacity back to the water. Practically, whatever the desired transformation is, some capacity to cause change must be consumed by the equipment which accomplishes the transformation; capacity to cause change ("fuel")

must be used up to make the transformation proceed.

Capital is needed to improve the efficiency of our transformations. Given boundless capital (for equipment and time) that we could invest for use in charging the capacitor by lowering the water, and then for pumping it back by discharging the capacitor, we could come as close as we would like to returning the original amount of water to the tower, but never more. That is the theoretical limit.

Figure 2 depicts equipment for accomplishing the transfer of "capacity to cause change" from the charged capacitor to the water. As the charge flows from the capacitor through the motor its potential drops to the "ground" value -- the equilibrium value, in our environment. The decrease in potential is given up to torque in the drive shaft which in turn transmits it via the pump to the water, taken from the reservoir. The pump increases the potential of the water, its pressure, from "ground" pressure (atmospheric) to that pressure corresponding to the water tower head.

At an instant when current is flowing from the capacitor at potential ϕ, and through the motor at a rate I_q, then the theoretical limit on the water flow rate I_V is given by $I_V]_{maximum} = [\phi - \phi_0]I_q/[p - p_0]$ where ϕ_0 is ground potential, p_0 is "ground" (i.e., atmospheric) pressure at the pump inlet and p is the pressure at the pump outlet. The relationship for I_V follows from the fact that the rate of hydraulic energy increase of the water $[p - p_0]I_V$ cannot exceed the rate of electric energy decrease of the charge $[\phi - \phi_0]I_V$. The greater $[p - p_0]$, the smaller can the maximum I_V be. Whether a small amount of water is having its potential increased greatly or a large amount is having its potential increased slightly, the maximum "capacity to cause change", $[p - p_0]I_V$, that the water will be acquiring would be the same. The maximum $[p - p_0]I_V$ would equal the "capacity to cause change" being given up by the charge, $[\phi - \phi_0]I_q$, which is the "potential energy" decrease of the charge -- the energy decrease associated with bringing it to complete equilibrium with our environment (to "ground"). Under these ideal conditions, the potential energy (or availability) flowing out $P_{A,out} = [p - p_0]I_V$ equals the potential energy (availability) flowing in $P_{A,in} = [\phi - \phi_0]I_q$.

Such ideal operation is the theoretical limit which can be approached but never reached in practice. Associated with real motors and pumps, there will always be dissipations of potential energy -- consumption thereof -- used up to make the motor and pump "go." These dissipations manifest themselves in "heat production"; if steady operating conditions are to be maintained -- which we will assume, here, since it will help illustrate certain important points -- the "heat" (entropy) which is produced must be transferred away, eventually flowing into our atmosphere at "ground" temperature, T_0. The thermal current into the atmosphere, I_θ, will need to equal the rate of "heat" (entropy) production in this steady case, and the associated energy transfer will be $T_0 I_\theta$. The energy balance for the composite, saying energy efflux equals energy influx, now yields $\phi I_q + p_0 I_V = \phi_0 I_q + pI_V + T_0 I_\theta$. Hence, $[p - p_0]I_V = [\phi - \phi_0]I_q - T_0 I_\theta$. That is, the potential energy output will be less than the input by the amount consumed to "drive" the transformation:

$$P_{A,out} = P_{A,in} - \dot{A}_c$$

where $\dot{A}_c = T_0 I_\theta$ represents the rate of availability consumption -- rate of potential energy consumption.

Effectiveness -- The True Efficiency

In the theoretical limit, potential energy supplied with any commodity can be completely transferred to any other commodity. In the case of real transformations, the degree to which this perfection is approached is measured by the so-called effectiveness (4, 16, 17):

$$\varepsilon \equiv \frac{\text{potential energy in product}}{\text{potential energy supplied}}$$

For the composite of motor and pump just considered, the true measure of how well the "capacity to cause change" was converted from the electrical to hydraulic form is given by

$$\varepsilon = \frac{[p - p_0]I_V}{[\phi - \phi_0]I_q} = \frac{P_{A,out}}{P_{A,in}}$$

The denominator exceeds the numerator by the amount of potential energy consumed, $\dot{A}_{consumed}$: $\varepsilon = [P_{A,out}]/[P_{A,out} + \dot{A}_c]$. For any conversion, the theoretical upper limit of ε is 100 per cent, which corresponds to the ideal case with no dissipations. To approach that limit, in practice, requires greater and greater capital investmant of money and/or time. The tradeoff, then, is the classical one: operating costs (for fuel) versus capital (for equipment and time). An important point here is that optimization of this tradeoff can be greatly facilitated by the application of Second Law analyses, applying potential energy analyses to processes, devices and systems (5, 6, 7, 10, 11, 17, 18, 19).

Conventional efficiencies and unit product costs defined in terms of "product" energy and "fuel" energy are generally faulty, to a degree which depends upon the kind of device or system to which they are applied. Basically, their worth is proportional to how well they approximate the effectiveness, ε.

Thermal and Chemical Potential Energy

Recall the relationship $\dot{A}_c = T_0 I_\theta$ for the special circumstances illustrated in Figure 2. Since I_θ equals the rate of entropy production, $\dot{S}_p$, the special equation $\dot{A}_c = T_0 I_\theta$ illustrates the general relationship $\dot{A}_c = T_0 \dot{S}_p$, which says that the rate of "heat" (entropy) production is proportional to the rate of potential energy consumption. It must be emphasized that $T_0 I_\theta$ does not represent potential energy "escaping to the environment" in Figure 2, but potential energy consumed within the composite of motor, pump, etc.; it does represent energy flowing into the environment, but it has no capacity to cause change since it is at "ground" temperature T_0 -- at equilibrium with our environment.

In actuality, the temperature of the system components rises as a result of the dissipations inside. Therefore the thermal current leaving from the surface σ would not be at T_0 but at a higher temperature T_σ, carrying potential energy at a rate $[T_\sigma - T_0]I_\theta$. Thus, a small amount of potential energy does escape thermally -- a small fraction of the energy escaping thermally.

Whenever we have a thermal current I_θ at a temperature $T_\sigma \neq T_0$, we could use a "heat cycle" (thermal motor) whose work output could be used say to drive a generator. In the theoretical limit with no dissipations inside the cycle or generator, the electric output would be $P_{A,elec} = [\phi - \phi_0]I_q = [T_\sigma - T_0]I_\theta$. Since

the energy input to the cycle is $P_{E,thermal} = T_\sigma I_\theta$ we can rewrite the latter as $P_{A,elec} = [1 - (T_0/T_\sigma)]P_{E,thermal}$; or $W = [1 - (T_{out}/T_{in})]Q$, which is the classic result, usually derived in a complex manner from obtuse "Second Law" statements.

With algebraic combination of an energy balance and a potential energy balance on the composite of Figure 2 for this case with $T_\sigma > T_0$ we would again find $\dot{A}_c = T_0\dot{S}_p$ -- a general relationship.

When charge flows at a rate I_q, $P_E = \phi I_q$ and $P_A = [\phi - \phi_0]I_q$. When entropy flows at a rate I_θ, $P_E = TI_\theta$ and $P_A = [T - T_0]I_\theta$. When a chemical j diffuses at a rate I_j, $P_E = \mu_j I_j$ and $P_A = [\mu_j - \mu_{j0}]I_j$, where μ_{j0} is the chemical potential of j in the reference environment. When there is bulk flow of a material, carrying entropy too, $P_E = \mu_j I_j + TI_\theta = [\mu_j + Ts_j]I_j = h_j I_j$ and $P_A = [\mu_j - \mu_{j0}]I_j + [T - T_0]s_j I_j = [h_j - T_0 s_j - \mu_{j0}]I_j$.

The Second Law

Potential energy does represent the capacity to cause change for us. It is a commodity. It is distinct from energy; it is not the same commodity. Energy cannot serve as a measure of capacity to cause change for us; only potential energy (availability) can. Some might be inclined to claim the contrary, arguing that the distinction is artificial, since the difference between an energy flow like ϕI_q with charge (or pI_V for "incompressible fluids") and the corresponding potential energy flow $[\phi - \phi_0]I_q$ is a trivial difference which can be eliminated by measuring the potential relative to ground. Thus, if $\phi_0 \equiv 0$ then $\phi = [\phi - \phi_0]$. As a matter of fact, for commodities such as <u>charge</u> (and volume of "incompressible fluids"), which are conserved, the "ground" potential <u>can be</u> arbitrarily set to zero, with no disruptions. But for other, non-conserved commodities "ground" potential cannot be set to zero; for example, "ground" temperature T_0 cannot be arbitrarily defined to be zero.

In summary, then, energy does not in general represent the "capacity to cause change for us"; energy flows associated with non-conserved commodities are not representative of such capacity. And, energy associated with such commodities cannot, even in the ideal limit, be completely transferred to other commodities.

<u>Potential energy, which anything has when it is not in complete equilibrium with our environment, does represent the capacity to cause change for us. It can be transferred from one thing to any other</u> (but completely only in the <u>ideal</u> limit). <u>In actuality, to accomplish changes for us some potential energy is invariably used up</u>, because it is needed to make the changes occur. This paragraph presents the essence of the <u>Second Law</u>.

Energy is not the commodity we value; potential energy (availability) is.

The Methodology of Availability Analyses

To improve the operating "fuel" economy of an "energy" system means to lessen the potential energy <u>consumed</u> within the system and that <u>lost</u> in effluents so that, for a specified amount of product, the amount of potential energy -- "fuel" -- that needs to be supplied is thereby decreased. The overall <u>effectiveness</u> of the system is a measure of the prospects for improvement of fuel economy. The lower the effectiveness, the greater the prospects.

To ascertain the <u>consumption losses</u> and effectiveness requires the evaluation of the rates at which availability (potential energy) is transferred in and out with different commodities. These calculations involve exactly the same type of

procedures as the evaluation of energy flows.

Not only is an overall analysis of an "energy" system valuable, but so is a detailed analysis which pinpoints where and to what extent the availability consumptions occur, within the system. The procedures for making a more detailed analysis are identical to those for the overall analysis. It is simply a matter of applying balances to subsystems of the overall system. In turn, components can be broken down and analyzed further, process by process.

Application to Coal Gasification Systems

In this paper the methodology of availability analysis will be illustrated by application to the Koppers-Totsek gasification system, illustrated in Figure 3 and in Table 1; the tabular data are taken directly, calculated or estimated from Farnsworth et al (8, 9).

Consider the combination of coal preparation and gasifier units. An availability balance says that the rate at which availability enters equals that at which it leaves plus the rate of consumption

$$A_1 + A_2 + A_3 + A_6 + A_7 + A_8 + A_{25} + A_{26} = A_{10} + A_4 + A_9 + A_c$$

The only useful product is A_{10}, therefore the effectiveness of this system is

$$\varepsilon = \frac{A_{10}}{A_1 + A_3 + A_6 + A_7 + A_{25} + A_{26}}$$

where the combustion air, free from the environment, has zero availability ($A_2 = 0$) and the water, free except for purification, has very little ($A_8 \approx 0$). The difference between the numerator and denominator consists of A_c, the availability consumed to drive the processes, plus $A_4 + A_9$ which are waste losses to the environment.

The gas leaving at 10 is an ideal gas mixture with composition shown in Table 1. The availability transferred per mole flowing is

$$a_{10} = h_{10} - T_0 s_{10} - \sum x_{j10}\mu_{j0} = \sum x_{j10}[h_j(T_{10}) - T_0 s_j(T_{10}, x_{j10}p_{10}) - \mu_{j0}]$$

The evaluation of these quantities, by standard thermostatic property calculations, are shown in the Appendix, along with a handy tabulation of formulas for evaluating the terms for each constituent. The results, for the flow streams referred to above, give

$$A_{10} = m_{10}a_{10} = 1.8247 \frac{\text{kg}}{\text{kg coal}} \cdot 12387 \frac{\text{kJ}}{\text{kg}} = 22602 \frac{\text{kJ}}{\text{kg coal}}$$

$$A_3 = 1582 \frac{\text{kJ}}{\text{kg coal}} \qquad A_6 = 123.8 \frac{\text{kJ}}{\text{kg coal}}$$

$$A_7 = 39.25 \frac{\text{kJ}}{\text{kg coal}}; \qquad 4.184 \frac{\text{kJ}}{\text{kg}} = 1 \frac{\text{kcal}}{\text{kg}} = 1.8 \frac{\text{Btu}}{\text{lb}}$$

The electrical transport rates are given directly by the estimated values of

$$A_{25} = 15.2 \frac{\text{kJ}}{\text{kg coal}} \qquad A_{26} = 73.6 \frac{\text{kJ}}{\text{kg coal}}$$

The availability of the coal described in Table 1 turns out to be

$$a_{coal} = 11710 \frac{\text{Btu}}{\text{lb coal}}$$

Substitution of all these quantities into the expression yields

$$\varepsilon\Big]_{\text{system 1}} = \frac{22602}{29052} = 0.78$$

The combination of consumption and losses is equal to the sum of the inputs minus the output of product:

$$A_c + A_{losses}\Big]_{\text{system 1}} = A_c + A_4 + A_8 = 29054 - 22602 = 6453 \ \frac{kJ}{kg\ coal}$$

This consists primarily of availability consumption, for driving the processes. The loss with flue gases and hot slag are

$$A_4 = 104.2 \ \frac{kJ}{kg\ coal} \qquad A_9\Big]_{hot} \doteq 580 \ \frac{kJ}{kg\ coal}$$

This leaves, for the total consumption by processes within the system,

$$A_c = 5769 \ \frac{kJ}{kg\ coal}$$

If the hot slag is merely quenched, essentially to atmospheric temperature, and no use is made of A_9, then the 580 kJ/(kg coal) is consumed by the quenching process.

A similar analysis has been made on the combination of oxygen-production unit, steam-generation unit, and clean-up unit. It was found that

$$A_c\Big]_{\text{system 2}} = 2452 \ \frac{kJ}{kg\ coal}$$

with losses of

$$A_{16} = 899.6 \ \frac{kJ}{kg\ coal} \qquad A_{14} = 69.9 \ \frac{kJ}{kg\ coal}$$

and outputs of

$$A_{17} = 17485 \ \frac{kJ}{kg\ coal} = 4179 \ \frac{kcal}{kg\ coal} = 7522 \ \frac{Btu}{lb\ coal}$$

$$A_{18} = 715 \ \frac{kJ}{kg\ coal} \qquad A_3 = 1582 \ \frac{kJ}{kg\ coal}$$

$$A_6 = 123.8 \ \frac{kJ}{kg\ coal} \qquad A_7 = 39.25 \ \frac{kJ}{kg\ coal}$$

Thus, the effectiveness with which system 2 would operate, with the supposed data employed here, is

$$\varepsilon_{\text{system 2}} = \frac{\Sigma A_{out}}{\Sigma A_{in}} = \frac{\Sigma A_{out}}{\Sigma A_{out} + \Sigma A_{loss} + A_c} = \frac{19945}{19945 + 970 + 2452} = 0.85$$

The power plant illustrated in Figure 3 is taken to be a conventional power plant, with the exception that it utilizes the export steam, stream 18 from heat recovery. (Of course, that steam could be used for a variety of alternate purposes, instead.) As shown by Gaggioli et al (1975), the effectiveness with which the power plant uses A_{17} is $\varepsilon \sim 0.4$, while it uses A_{18} with $\varepsilon \sim 0.8$. Therefore, the total electricity production by the power plant is

$$A_{elec} = 0.4\ A_{17} + 0.8\ A_{18} = 7566 \ \frac{kJ}{kg\ coal}$$

The net electricity production by the whole system, A_{27}, is this 7566 kJ/(kg coal) less that used in-plant:

$$A_{27} = 7566 - 132 - 3 - 9 - 15 - 74 = 7333 \ \frac{kJ}{kg\ coal}$$

The overall system effectiveness is

$$\varepsilon_{overall} = A_{27}/A_1 = 0.27$$

compared to $\varepsilon \sim 0.39$ for a power plant burning relatively low-sulfur coal (Gaggioli et al, 1975).

The effectiveness of the overall gasification system per se is best gauged by

$$\varepsilon_{gasification} = \varepsilon_{overall}/\varepsilon_{power\ plant} = 0.68$$

The foregoing analysis of the conversion of coal to electricity only breaks the overall system down into three major parts. By the same methods, each of these parts can be broken down further to determine the consumptions (and losses) associated (i) with each of its components, and in turn (ii) with each process in a component. Figure 4 presents such results. The results for the power plant are discussed and presented in more detail by Gaggioli et al (1975); in the appendix to that paper, the details of the availability calculations are presented for a variety of devices and processes.

Conclusions

What kinds of conclusions can be drawn from the results presented here? Some conclusions can be drawn dealing with K-T gasification per se, and some in conjunction with the power plant. For examples, where in the gasification system are there significant prospects for improvement, if anywhere? How might improvements be accomplished? Also, comparisons between the K-T and other gasification systems can be made more objectively, as well as the comparison of the relative desirability of high-Btu gasification versus low- or medium-Btu.

Consider first the K-T gasification system, itself. It is evident from the results summarized in Figure 4 that the largest dissipations are in the gasifier, due especially to the uncontrolled kinetics of reaction. The drying process, with its burning of clean product gas, is highly consumptive. There are fairly sizeable consumptions in the heat transfer from hot products, at a high $[1 - (T_0/T)]$ to jacket steam with a relatively low $[1 - (T_0/T)]$, and losses in the slag from the gasifier and in the sulfur from cleanup, as well as several other consumptions of the same order of magnitude.

Of course, no cost effective opportunities to reduce any consumption or loss should be overlooked. However, the first place to look, for striving to improve the system, is in the places where the relatively large consumptions (and losses) occur. That is probably where the better opportunities are. For the case at hand, can the chemical reactions be accomplished with less dissipation?* Can they be avoided in some cases such as in drying? Can heat transfer be improved? In the end, of course, the addition of other or larger equipment for accomplishing such improvements must be cost effective. It might be that there is no hope for improvements like these; the dissipations might be inherent to the basic processes of the K-T system. If so--although the authors would not jump to that conclusion--then the analysis may be saying to look toward alternative types of systems, for gasification and/or for clean production of power from coal. (And availability analyses of the alternatives would be very worthwhile.)

Some additional remarks regarding the gasifier may be helpful to the comprehen-

*If methods could be found for economically reducing the dissipations associated with reactions on the gasifier, the same methods might be applicable to the boiler combustion--the largest single dissipation in the overall power system.

sion of the potential energy (availability) concept and its usefulness. [In the following, what may appear to be criticisms of Farnsworth et al (8, 9) are not intended to be that at all. The references to that article are incidental; numerous others could be used alternatively, though not as conveniently. The intent is not criticism, but the better appreciation of the importance of availability analyses.] Farnsworth et al claim that the overall "thermal efficiency" of system 1, basically the gasifier, is 85 to 90 per cent--that is, the "useable heat output in gas and steam divided by the total heat input to the gasifier" is 85 to 90 per cent. To cite such efficiencies--energy ratios--is misleading. The "useful energy" of the steam, its potential energy, is much less than its energy, hence energy efficiencies are generally misleading. The proper measure of how well the gasifier performs its function is the 78 per cent effectiveness. Farnsworth et al could argue that they cover this point when they say, "The cold gas efficiency, that is, the ratio of the calorific value of the gas to the calorific value of the coal, is in the range of 75 to 77 per cent." In a sense, that statement does cover the point. However, (i) it is fortuitous, inasmuch as the availability and energy of the coal are close in value, at T_0, p_0, and so are those of the product gas. As mentioned earlier, only in such instances is an "energy efficiency" a worthy approximation of the true efficiency; effectiveness. (For example, the true efficiency of a comfort heating furnace is less than 15 per cent, even if its "energy efficiency" were 80 per cent.) Secondly, (ii) even though <u>today</u> the predominant use of gas and coal is to produce heat via combustion, it is misleading to imply that the value of these commodities lie in their "calorific value". The value is in the availability (potential energy). For example if at some time in the future gas were to be used, predominantly, for the direct production of electricity, say with cells, then it would be evident that the value of the gas is not its calorific value but its availability--which represents the maximum amount of useful electricity which could be gotten from the gas, under ideal conditions. If, in turn, that electricity were used to drive a heat pump, the amount of heat deliverable is dictated by the availability of the original gas. That is, <u>whatever</u> transitions might occur between the gas and the heat ultimately delivered, the availability of the heat cannot exceed the availability of the gas, from which it is derived; the maximum amount of heat that could be obtained is $Q = A/[1 - (T_0/T)]$, where T is the temperature at which the heat is delivered. If $T = 90^oF = 550^oR$, a typical value for home heating, and if outdoor temperature $T_0 = 40^oF = 500^oR$, then a cell with $\varepsilon = 0.5$ in conjuction with a heat pump of today's technology, $\varepsilon = 0.35$, would yield $Q = 1.93\ A_{gas}$ = (1.93)(calorific value). In fact, even with today's typical power plant with $\varepsilon = 0.35$, $Q = 1.35\ A_{gas}$! The point, here, is not to argue in favor of heat pumps; they have many shortcomings not mentioned here, especially as T_0 drops. The point is that it is potential energy, not energy or "calorific value" which measures a commodity's usefulness for effecting changes.

Availability analyses like those presented here can be applied grossly, to overall sectors of the economy such as the industrial, the residential and commerical, and the transportation sectors to assess opportunities for improvement. These sectors can be analyzed in more detail by applying the analyses to sub-sectors, such as iron and steel, petroleum refining, aluminum and other industrial sub-sectors. In turn, each sub-sector can be analyzed in more detail by considering their different conversion systems, and so on.

All of this should be done, to determine where the potential for improvement lies. This work has begun (Reistad, 1974; Gyftopoulos et al, 1975; Hall, 1975); see Table III for a summary of typical results. The following points are noteworthy: The 10 to 15 per cent effectiveness with which energy is utilized in this country, though improved greatly over the 2 or so per cent of a century ago, is very low; basically, this is encouraging inasmuch as it shows that there is great opportunity

for improvement remaining. Conservation (in conversion, not in end-use) can contribute effectively to the resolution of the energy problem--even over the relatively short term, with today's technology--provided of course that capital is brought to bear.

Another important point which can be concluded from Figure 4 and Table III is that the production of electricity is one of our most efficient energy conversions. The great losses commonly ascribed to the stack gases and cooling water are hardly losses at all; the actual losses are elsewhere in the plant, and as a fraction of input are small compared to most conversion systems. Furnaces and all-fossil total energy systems, considered to be very efficient, are very inefficient or fairly efficient, respectively. For example, these comments have considerable negative impact on the desirability of high-Btu coal gasification and of the "Hydrogen Economy" for the purpose of distributing these synthetic fuels about for combustion in furnaces and boilers.

The foregoing methods for analyzing "energy" systems are aimed at pinpointing the losses and measuring their magnitudes and resultant per cent inefficiencies, in order to determine where opportunities for improvement and conservation lie, for the purposes of decision-making for allocation of resources-- capital, R&D effort, and so on. The methods, which involve exactly the same kinds of calculations as energy analyses, also enhance the germination of prospective ideas and the quick evaluation thereof.

Availability analyses are valuable not only for pinpointing losses but also for direct application to the design of energy systems and for other engineering projects (system modifications, maintenance, etc.), as well as for cost allocation. The key to these applications, in their infancy,(5, 6, 7, 10, 11, 18, 19, 23) is that monetary value can be assigned to the availability at the different junctures between components of a system, where availability flows from one component into another, for which it is the "fuel". Because it is availability, not energy, which "fuels" each device in a system, the only rational way of assigning monetary value (cost) to the "fuel" for each device or process is to assign the value to availability. Then for each component a rational comparison of fuel cost with other operating and capital costs can be made, for making the economically optimal selection.

APPENDIX

Details of Thermostatic Property Calculations and Tabulation of Convenient Formulas

Consider the availability transported per mole of a flowing gaseous mixture:

$$a = h - T_0 s - \sum x_j \mu_{j0}$$

where μ_{j0} is the chemical potential of species j in the reference environment. If the mixture behaves ideally,

$$a_{mix}(T,p) = h_{mix}(T,p) - T_0 s_{mix}(T,p) - h_{mix}(T_0,p_0) + T_0 s_{mix}(T_0,p_0)$$
$$+ \sum x_j [h_j(T_0,x_j p_0) - T_0 s_j(T_0,x_j p_0) - \mu_{j0}]$$

where h_j and s_j are the partial molar enthalpy and entropy of species j. Then

$$a_{mix}(T,p) = \int_{T_0}^{T} \sum x_j[c_{pj} - \frac{T_0}{T} c_{pj}]dT - RT_0 \ln \frac{p}{p_0}$$

$$+ \sum x_j[h_j(T_0) - T_0 s_j(T_0, x_j p_0) - \mu_{j0}]$$

And we may write

$$a_{mix}(T,p) = \sum x_j a_j = \sum x_j[a_{j,thermal} + a_{j,pressure} + a_{j,chemical}]$$

where

$$a_{j,t} = \int_{T_0}^{T} [1 - \frac{T_0}{T}]c_{pj}\, dT \qquad a_{j,p} = RT_0 \ln \frac{p}{p_0}$$

$$a_{j,c} = h_j(T_0) - T_0 s_j(T_0, x_j p_0) - \mu_{j0}$$

If species j actually exists as a pure condensed phase in the stable reference environment, then μ_{j0} simply equals $g_j(T_0, p_0)$. If j exists as a gas in the reference environment, $\mu_{j0} = h_j(T_0) - T_0 s_j(T_0, x_{j0} p_0)$, and

$$a_{j,c} = -T_0[s_j(T_0, x_j p_0) - s_j(T_0, x_{j0} p_0)] = RT_0 \ln(x_j/x_{j0})$$

If species j does not exist in the stable equilibrium reference environment, $a_{j,c}$ must be determined by reacting j with environmental constituents to produce other environmental constituents - in other words, by bringing j to stable equilibrium with the environment via reactions with environmental constituents. It is the chemical potentials of these products, weighted stoichiometrically, which gives μ_{j0}. Consider CO, for example. It is not stable in the atmosphere, but can react with O_2 from the atmosphere to produce stable CO_2. Then

$$a_{CO,c} = h_{CO}(T_0) - T_0 s_{CO}(T_0, x_{CO} p_0) - \mu_{CO,0} = g_{CO}(T_0, x_{CO} p_0) - \mu_{CO,0}$$

$$= g_{CO}(T_0, x_{CO} p_0) + \frac{1}{2} \mu_{O_2}(T_0, x_{O_2,0} p_0) - \mu_{CO_2}(T_0, x_{CO_2,0} p_0)$$

$$a_{CO,c} = g_{CO}(T_0, x_{CO} p_0) + \frac{1}{2} g_{O_2}(T_0, x_{O_2,0} p_0) - g_{CO_2}(T_0, x_{CO_2,0} p_0)$$

The evaluation of the quantities on the right-hand side may be accomplished as follows, employing Gibbs free energy of formation and $dg]_T = v\, dp$.

$$g_{CO}(T_0, x_{CO} p_0) = g_{CO}(T_0, p^o) + [g_{CO}(T_0, x_{CO} p_0) - g_{CO}(T_0, p^o)]$$

Since CO behaves as an ideal gas at T_0, between $p = x_{CO} p_0$ and p^o, as long as $x_{CO} p_0$ is moderate $\Delta g = \int dg = \int v dp = \int [RT/p]dp = RT\ln(x_{CO} p_0/p^o)$. Thus, the foregoing equation gives

$$g_{CO}(T_0, x_{CO} p_0) = g_{CO}(T_0, p^o) + RT \ln(x_{CO} p_0/p^o)$$

Similar analyses for the O_2 and CO_2 yield

$$g_{CO_2}(T_0, x_{CO_2} p_0) = g_{CO_2}(T_0, p^o) + RT \ln(x_{CO_2,0} p_0/p^o)$$

$$g_{O_2}(T_0, x_{O_2,0} p_0) = g_{O_2}(T_0, p^o) + RT \ln(x_{O_2,0} p_0/p^o)$$

With these three expressions, the last equation for $a_{CO,c}$, for the case where $T_0 = T^o$ and $p = p_0 = p^o$, can be rewritten as

$$a_{CO,c} = [g^o_{f,CO} + \frac{1}{2} g^o_{f,O_2} - g^o_{f,CO_2}] + RT \ln [x_{CO}(x_{O_2,0})^{1/2} / x_{CO_2,0}]$$

The first combination of terms, which can be evaluated with standard tabular values of Gibbs free energy of formation, can be called the reactive availability of the CO, while the second, logarithmic term can be called compositional availability.

Consider another case of a species j, this time for a case where one or more of the completely stable products of reaction exists as a pure condensed phase and/or one or more of the environmental constituents with which j reacts in order to reach complete stability is a pure condensed phase. As an example, suppose j is COS. It is assumed that the stable configuration of S in the reference environment is in gypsum, $CaSO_4 \cdot 2H_2O$; the reason for this assumption will be explained below. To get the S into this compound requires a source of Ca from the reference environment - a "free" source. That is taken to be limestone, $CaCO_3$. Thus, the reaction for bringing the COS to complete, stable equilibrium with the reference environment, employing constituents from the environment alone, is

$$COS + 2O_2 + CaCO_3 + 2H_2O \rightarrow 2CO_2 + CaSO_4 \cdot 2H_2O$$

It is implicit to the foregoing that the potential for driving this reaction resides in the COS - that among the reactants and products only the COS is not in stable equilibrium with the reference environment. The net potential energy output from this reaction, under ideal conditions, is thus attributed to the COS and represents its chemical availability:

$$a_{COS}]_c = g_{COS}(T_0, x_{COS} p_0) + 2g_{O_2}(T_0, x_{O_2,0} p_0) + g_{CaCO_3}(T_0, p_0)$$

$$+ 2g_{H_2O}(T_0, p_0) - 2g_{CO_2}(T_0, x_{CO_2,0} p_0) - g_{CaSO_4 \cdot 2H_2O}(T_0, p_0)$$

Then, with manipulations like those used above for the CO,

$$a_{COS,c} = [g^o_{f,COS} + 2g^o_{f,O_2} + g^o_{f,CaCO_3} + 2g^o_{f,H_2O} - 2g^o_{f,CO_2} - g^o_{f,CaSO_4 \cdot 2H_2O}]$$

$$+ RT \ln [(x_{COS} (x_{O_2,0})^2 / (x_{CO_2,0})^2]$$

Why were solid $CaSO_4 \cdot 2H_2O$ and solid $CaCO_3$ assumed to be constituents of the stable reference environment? These assumptions were provoked by the need to find "the" stable configuration for S in our environment. It is not S itself, because S could react with O_2 from the environment to produce SO_2 and yield a net potential energy (availability) output, since ΔG for the reaction is negative. (For an exhaustive treatment of equilibrium and stability conditions, in relation to availability, see Hatsopoulos and Keenan, 1965). But neither is the SO_2 stable; it can combine with O_2 to produce SO_3. In turn the SO_3 can react with environmental H_2O to produce H_2SO_4, which obviously has significant potential to cause change--availability. What next? Pursuit of this question led, after extensive deliberation and study, including a search through tables of Gibbs free energies of formation (g_f's), to the conclusion that $CaSO_4 \cdot 2H_2O$ was very nearly stable if not "the" stable compound containing S. In turn, unfortunately, there was a need for a stable compound of Ca, to react with S, to bring the S to stability; the search for this led

to $CaCO_3$. Thankfully, this did not introduce the need for yet another compound, because reactions of S and S compounds of interest, with $CaCO_3$ and other environmental constituents such as O_2 and H_2O, to produce stable compounds, yield only $CaSO_4 \cdot 2H_2O$ and CO_2. A feature of the $CaSO_4 \cdot 2H_2O$ and $CaCO_3$ which is critical to their selection as stable compounds is their abundance in our environment.

The latter completes the presentation of the theory for making thermostatic property calculations to evaluate the availability of flow streams. It should be mentioned that any kinetic energy or gravitational potential energy associated with flowing fluids has been neglected throughout; when these are not negligible it is simply a matter of adding them: $P_A = [h - T_0 s + Mv^2/2 + mgZ - \Sigma x_j \mu_{0j}]I_n$.

Following is a list of convenient formulas, deduced from the above developments, for evaluating $a_{j,t}$ and $a_{j,c}$ of many of the constituents which are in gas streams of gasification systems. In particular, formulas are given for each of the constituents of Table I.

Formulas for Chemical Availability, $a_{j,c}$

$$a_{CO} = 0.59248 \ln x_{CO} + 65.788 \text{ kcal/g mole}$$

$$a_{CO_2} = 0.59248 \ln x_{CO_2} + 4.8060$$

$$a_{CH_4} = 0.59248 \ln x_{CH_4} + 198.46$$

$$a_{H_2} = 0.59248 \ln x_{H_2} + 56.235$$

$$a_{H_2O} = 0.59248 \ln x_{H_2O} + 2.0717$$

$$a_{N_2} = 0.59248 \ln x_{N_2} + 0.16518$$

$$a_{H_2S} = 0.59248 \ln x_{H_2S} + 189.94$$

$$a_{COS} = 0.59248 \ln x_{COS} + 200.61$$

$$a_{O_2} = 0.59248 \ln x_{O_2} + 0.94328$$

$$a_S = 139.54$$

Formulas for Thermal Availability

$$a_T = \left(\frac{A}{10^3} - \frac{T_0 B}{10^6}\right)(T - T_0) + \left(\frac{B}{2.10^6} - \frac{T_0\, C}{2.10^9}\right)\left(T^2 - T_0{}^2\right) + \left(\frac{C}{3.10^9} - \frac{T_0\, D}{3.10^{12}}\right)\left(T^3 - T_0{}^3\right)$$

$$- \frac{D}{4.10^{12}}\left(T^4 - T_0{}^4\right) - \frac{T_0\, A}{10^3} \ln \frac{T}{T_0} \quad \frac{\text{kcal}}{\text{g mole}}$$

where

	A	B	C	D
CO	6.726	.4001	1.283	-.5307
CO_2	5.316	14.285	-8.362	1.784
CH_4	4.750	12.0	3.03	-2.63
H_2	6.952	-.4576	0.9563	-.2079

	A	B	C	D
H_2O	7.700	0.4594	2.521	-.8587
N_2	6.524	1.448	-.2271	0.
H_2S	7.070	3.128	1.364	-.7867
COS	5.626	16.573	-10.868	2.499
O_2	6.058	3.631	-1.709	.3133

For Pressure Availability

$$a_p = 0.59248 \ln \frac{p_{stream}}{p_0} \left[\frac{kcal}{g\ mole}\right]$$

where p is the total pressure of the flow stream.

All of the availabilities evaluated in this paper assumed a stable reference environment including, in abundance, the following components, all at

$$T_0 = 298.15^\circ K\ (77^\circ F)$$

$$p_0 = 1\ atm$$

Components:

- Air Constituents	Mole Fraction	- Condensed phases, at T_0, p_0
N_2	0.7567	H_2O
O_2	0.2035	$CaCO_3$
H_2O	0.0303	$CaSO_4 \cdot 2H_2O$
A	0.0091	
CO_2	0.0003	
H_2	0.0001	

Nomenclature

$\dot{A}$ = availability per unit time
A = availability flow per unit of coal fed to system
a = availability (potential energy) per unit mass or per mole
E = energy
G = Gibbs free energy
g = G per mole (or per unit mass)
h = enthalpy per mole (or per unit mass)
I = current (commodity per unit time)
m = mass flow per unit of coal fed to system
P = power
p = pressure
Q = heat (energy)
q = change
R = universal gas constant
S = entropy
s = entropy per mole (or per unit mass)
T = temperature
V = volume
v = volume per mole (or per unit mass)
v = velocity
x = mole fraction
Z = altitude

Greek Symbols

ε, effectiveness
θ, thermal
μ, chemical potential
σ, surface
ϕ, electric potential

Subscripts and superscripts

c, consumption
c, chemical
f, formation
j, jth constituent
l, loss
n, molar
p, production
O, reference environment
$^\circ$, standard state
$\cdot$, time rate of change

Table I

Flow Stream Conditions

STREAM NO.	1		2		3		4		5		6		7		8		9		10	
DESCRIPTION	RAW COAL		COMBUSTION AIR		DRYING GAS		FLUE GAS		DRY PULVERIZED COAL		OXYGEN		ADDITIONAL PROCESS STEAM		WATER FOR JACKET STEAM		QUENCHED SLAG		RAW OFTGAS TO HEAT RECOVERY	
kg	1.0		.4833		.1377		.6403				.6900		.0668		.1984		.1805		1.8247	
T, °C(°F)	25 (77F)		25 (77F)		35 (95F)		202 (395F)				110 (230F)		121 (250F)		25 (77F)		25 (77F)		1482 (2700F)	
P, PASCALS (PSIA)	101348 (14.7)		101348 (14.7)		101348 (14.7)		101348 (14.7)				206832 (30)		206832 (30)		101348 (14.7)		101348 (14.7)		186149 (27)	
$\Delta_{THERMAL}$					.038		28.1				6.69								2933	
$\Delta_{PRESSURE}$											38.3								134	
$\Delta_{CHEMICAL}$	27217				1582		76.1				78.8								19535	
Δ_{TOTAL} (kJ)	27217		0		1582		104.2				123.8		39.2		0		0		22602	
COMPOSITION				MOLA		MOLA		MOLA				MOLA								MOLA
C	.6194																.0310			
H	.0436																			
O	.0673																			
N	.0097																			
S	.0488																			
ASH	.1912																.1495		.0417	
H_2O	.0200		.0092	.0303	.0069	5.45	.0775	19.65					.0668		.1984				.1885	11.75
H_2					.0049	34.44													.0548	30.55
CH_4																				
CO					.1034	52.50													1.2190	48.87
CO_2					.0206	6.66	.1823	18.92											.2434	6.21
H_2S																			.0492	1.62
N_2			.3842	.7662	.0019	0.95	.3661	59.38			.012	2.0							.0222	0.89
O_2			.1069	.2035			.0144	2.05			.6779	98.0								
COS																			.0059	0.11

(cont'd)

STREAM NO.	11		12		13		14		15		16		17		18		19		20	
DESCRIPTION	BOILER FEED WATER MAKEUP		CONDENSATE RECYCLE		HIGH PRESSURE STEAM TO AIR SEPARATION		NITROGEN		COOLED OFTGAS TO CLEANUP		SULFUR AND ASH		NET CLEAN GAS OUTPUT		EXPORT STEAM		COMBUSTION AIR		FLUE GAS	
kg	.7440						2.291				.0911		1.5227		.6772					
T, °C(°F)	25 (77F)						-46 (-50F)				25 (77F)		35 (95F)		313 (596F)					
P, PASCALS (PSIA)	101348 (14.7)						101348 (14.7)				101348 (14.7)		101348 (14.7)		10341615 (1500)					
$\Delta_{THERMAL}$							23.4						.393							
$\Delta_{PRESSURE}$																				
$\Delta_{CHEMICAL}$							46.5				900		17485							
Δ_{TOTAL}	0						69.9				900		17485		715					
COMPOSITION														MOLA						
C																				
H																				
O																				
N																				
S											.0494									
ASH											.0417									
H_2O	.7440												.0763	5.45	.6772					
H_2													.0540	34.44						
CH_4																				
CO													1.1437	52.50						
CO_2													.2279	6.66						
H_2S																				
N_2							2.291						.0208	0.95						
O_2																				
COS																				

Table II. Electrical Availability Flows

Stream No.	Use	Availability kJ/kg of coal
22	Gas Cleanup	132
23	Heat Recovery	3
24	Air Separation	9
25	Gasification	15
26	Coal Preparation	74
27	Net Electrical Output	7333

Table III. Effectiveness of Economic Sectors and of Some Industrial Sub-sectors (approximate, average values)

Economic Sectors (Reistad, 1974):

-Production of Electricity (consumes 20% of national energy resources)	ε = 30%
-Residential and Commerical, Direct Consumption (15%)	ε = 10%
-Industrial, Direct (35%	ε = 15%
-Transportation, Direct (30%	ε = 10%

Industrial Sub-sectors (Gyftopoulos et al, 1975):

-Iron & Steel (15% of industrial consumption)	ε = 21%
-Petroleum refining (11%)	ε = 90%
-Pulp & Paper (5%)	ε = 10% - rough estimate
-Aluminum (3%)	ε = 35%

-Cement, Copper, Rubber, Plastics, Glass studies are in process; detailed study has been done for iron & steel, process by process; to some degree for refining, pulp & paper, aluminum (Hall, 1975).

Conversion Systems & Devices

-Total-Energy	
-All-electric	ε = 30%
-All-fossil	ε = 30%
-Fossil-fired power plant	ε = 35%
-Combustion Engines (full-load)	ε = 35%
-Refrigeration	ε = 40%
-Comfort Conditioning	
-Furnaces	ε = 10%
-Heat Pump	
-electricity to heat	ε = 35%
-overall (e.g., coal to heat)	ε = 10%
-electricity to cooling	ε = 5 to 10%

WITH CHARGE, q	$P_E = \phi I_q$	WHERE	I_q = CURRENT
WITH INCOMPRESSIBLE FLUID FLOW	$P_E = p I_v$	WHERE	I_v = VOLUMETRIC FLOW RATE
WITH CHEMICAL COMPOUND, i	$P_E = \mu_i I_i$	WHERE	I_i = MOLAR FLOW RATE
WITH THERMAL CURRENT	$P_E = T I_\theta$	WHERE	I_θ = THERMAL CURRENT

.

.

FIGURE 1. TRANSPORTATION OF ENERGY THROUGH A CONDUIT VIA FLOW OF A COMMODITY

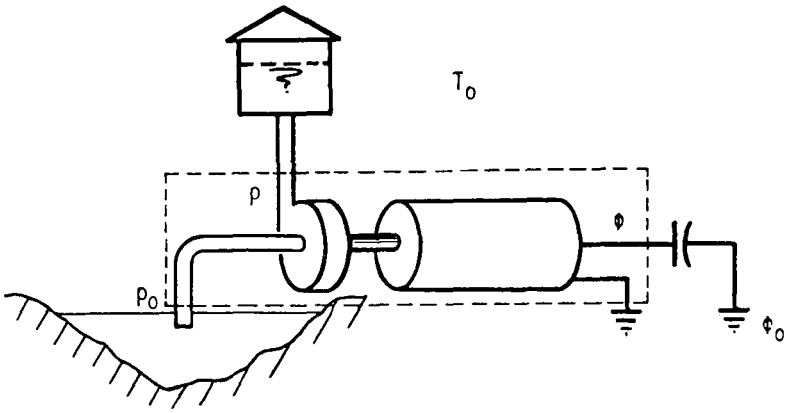

IDEAL OPERATION $\left[\phi - \phi_o\right] I_q \Rightarrow \left[p - p_o\right] I_v$

REAL OPERATION $\left[\phi - \phi_o\right] I_q \Rightarrow \left[p - p_o\right] I_v + T_o I_\theta$

FIGURE 2. TRANSFER OF POTENTIAL ENERGY FROM ONE COMMODITY (CHARGE) TO ANOTHER (WATER).

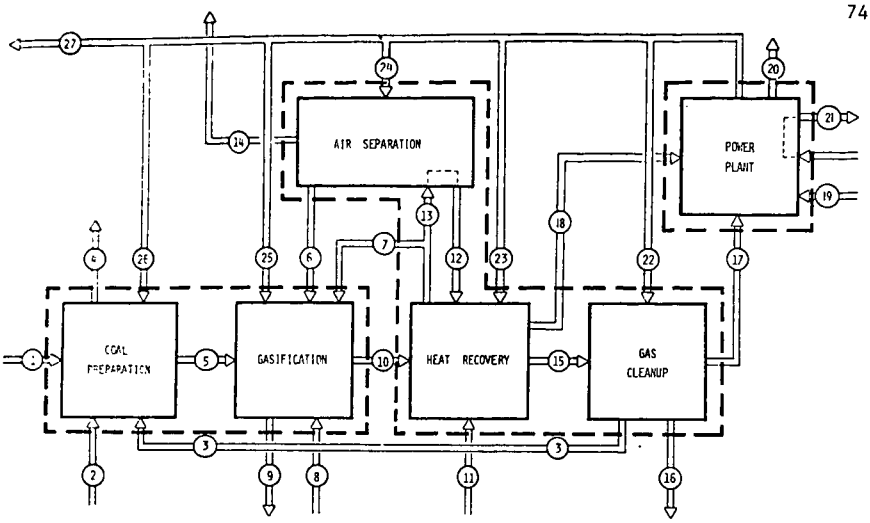

FIGURE 3 BLOCK DIAGRAM OF A TYPICAL MEDIUM-BTU GAS GENERATION AND CLEANUP SYSTEM FEEDING A CONVENTIONAL POWER PLANT

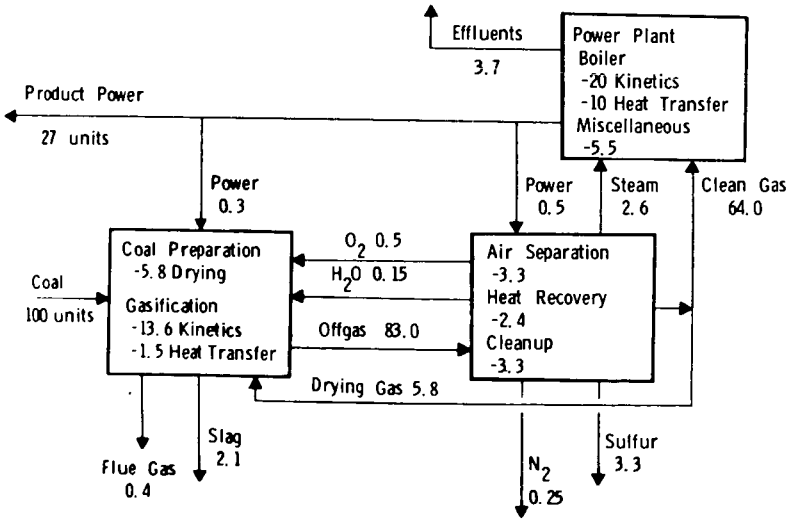

FIGURE 4. AVAILABILITY FLOW DIAGRAM FOR GASIFICATION AND POWER PLANT.

(Negative numbers represent availability consumptions.)

References and Literature Cited

1. C. Berg, "A Technical Basis for Energy Conservation", Mechanical Engineering, 1, No. 5, 30-42 (May, 1974).
2. C. Birnie and E. Obert, "Evaluation and Location of Losses in a 60 MW Power Station", Proc. Midwest Power Conf., 1949: 187.
3. E. Bruges, "Available Energy and the Second Law Analysis", Academic Press, London (1959).
4. G. Darrieus, "The Rational Definition of Steam Turbine Efficiencies", Engineering, 130: 283 (Sept. 5, 1930).
5. R. Evans and M. Tribus, The Thermoeconomics of Sea Water Conversion, UCLA Report No. 62-63 (1962).
6. R. Evans, M. Tribus and G. Crellin, "Thermoeconomic Consideration of Sea Water Demineralization", Principles of Desalination, K. Spiegler, ed. Academic Press, New York (1966).
7. R. Evans, Y. El-Sayed, "Thermoeconomics and the Design of Heat Systems", ASME Paper No. 69-Pwr-A (1969).
8. J. Farnsworth, H. Leonard, D. M. Mitsak and R. Wintrell, "The Production of Gas from Coal through a Commercially Proven Process", 5th Synthetic Pipeline Gas Symposium, AGA Catalog No. L51173 (1973).
9. J. Farnsworth, R. Whiteacre and D. M. Mitsak, "The K-T Process and its Application to Industrial Needs", 2nd Clean Fuels from Coal Symposium, Institute of Gas Technology, Chicago, IL 60616 (1975).
10. T. Fehring and R. Gaggioli, "Economic Analysis of Boiler Feed Pump Drive Alternatives", to be submitted to 1976 American Power Conference.
11. R. Gaggioli and T. Fehring, "The Economics of Feedwater Heater Replacement", to be submitted to the 1976 Joint Power Generation Conference.
12. R. Gaggioli, J. Yoon, S. Patulski, A. Latus and E. Obert, "Pinpointing the Real Inefficiencies in Power Plants and Energy Systems", Proc. 1975 Amer. Power Conference, Illinois Institute of Technology, Chicago, IL 60616 (1975).
13. E. Gyftopoulos, L. Lazaridis and T. Widmer, "Potential Fuel Effectiveness in Industry", Ballinger Publishing Co., Cambridge, Mass., 1975.
14. E. Hall, "Evaluation of the Potential for Energy Conservation in Industry", National Forum on Energy Conservation, Clean Energy Research Institute, University of Miami, Florida 33124. December 1975.
15. G. Hatsopoulos and J. Keenan, "Principles of General Thermodynamics", John Wiley and Son, New York (1965).
16. J. Keenan, "Thermodynamics", John Wiley & Son, New York (1941).
17. E. Obert, "Concepts of Thermodynamics", McGraw-Hill Book Co., New York (1960).
18. E. Obert and R. Gaggioli, "Thermodynamics", McGraw-Hill Book Co., New York (1963). 2nd Edition.
19. G. Reistad, "Availability: Concepts and Applications", Ph.D. Thesis, U. of Wisconsin, (1970).
20. G. Reistad, R. Gaggioli, and E. Obert, "Available Energy and Economic Analysis of Total Energy Systems", Proc. Amer. Power Conference, 1970: 603.
21. G. Reistad, "Available Energy Conversion and Utilization in the U.S.", ASME Paper No. 74-WA/Pwr-1 (1974).
22. Science, 188, 820 (1975).
23. J. Yoon, "Design of Thermal Energy Systems by Employing Availability Concepts", M.S. Thesis, Marquette U., 1974.

A COMPARISON OF THE NET ENERGY PRODUCTION RATIOS OF INTEGRATED SYSTEMS SUPPLYING NATURAL GAS,AND SNG FROM COAL, Donald L. Klass and William C. Chambers, Institute of Gas Technology, Chicago, Illinois 60616.

A comparative net energy analysis is presented for an integrated system supplying natural gas, and a comparable system supplying substitute natural gas (SNG) from coal. For natural gas, the external energy inputs and the primary energy source inputs consumed by the integrated system or diverted to other than salable natural gas, from drilling through production, purification and extraction,and transmission and distribution, are used to determine the Net Energy Production Ratio (NEPR) for the salable fuel reaching the consumer. Similarly, the energy inputs consumed in mining coal, transporting and preparing the coal, coal conversion to SNG, and the transmission and distribution of SNG to the customer are considered in deriving the NEPR for an integrated SNG-from-coal system. In each of these systems, salable by-products having an energy value are accounted for.

ENERGY ANALYSIS OF COAL LIQUEFACTION SYSTEMS

Dr. Kenneth P. Maddox
Dr. Richard L. Bain
Dr. Robert M. Baldwin

Colorado School of Mines Research Institute
and
Colorado School of Mines
Golden, Colorado

Net energy analyses of three integrated coal-liquefaction systems have been performed. In this paper the following facets of the analyses are discussed: methodology, liquefaction systems, energy balances, and energy ratios.

Methodology

Integrated fuel systems can be divided generally into steps. For the purpose of this analysis seven steps, or modules, were chosen. The seven steps with examples are: (1) Extraction- coal surface mining, (2) Transport I- haul to railroad, (3) Process- crushing, (4) Transport II- rail haul, (5) Conversion I- coal liquefaction, (6) Conversion II- electrical generation, and (7) Distribution- electrical transmission. Other examples follow the same general format, though they may require minor adjustments of individual modules (e.g. two-stage transport).

An analysis of a multi-step fuel system naturally reduces to the combination of analyses of individual modules. Consequently we shall next describe the analysis of a single module. A diagram of a module of an integrated fuel system, Fig. 1, displays the important features of modular analysis. The first law of thermodynamics is observed--Ein=Eout. Also, energy derived from and used within the system is always internal to the module. These precautions avoid a problem associated with some energy anlyses, ambiguous construction of system boundaries.

Energy input consists of two parts, Principal Energy and External Energy. Principal Energy is the primary energy input. External Energy is the sum of fuels , electricity, and of the energy embodied in materials which are purchased or "imported" from energy systems other than the one being analyzed.

Figure 1- Modular Analysis

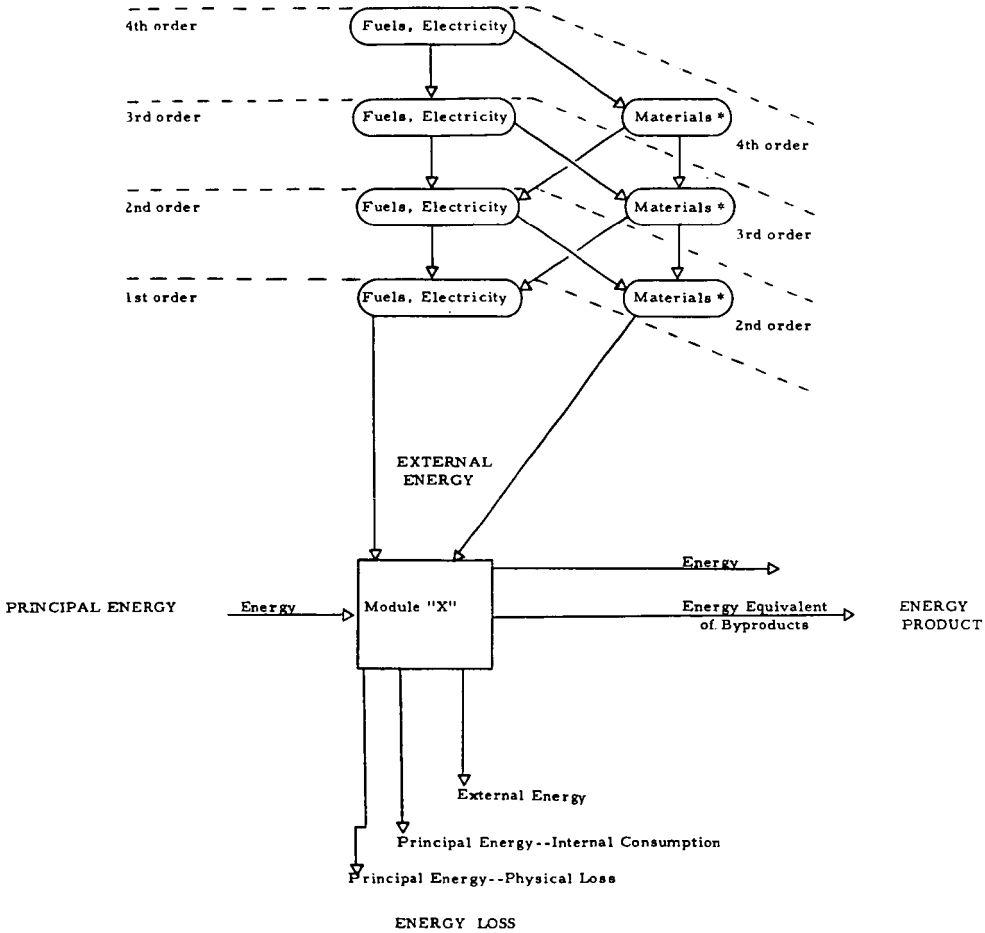

* Materials include raw materials, containers, machinery, consumable manufactured items (catalysts, lubricants, chemicals, process additives, etc.), tools, pipelines, wiring, construction materials, and road materials (asphalt, cement, tar, steel, etc.)

The energy "backup" needed to deliver External Energy must be considered to fully account for energy drain from other energy systems, thus requiring determination of the energy required to support direct inputs. This is diagrammed as ascending higher orders of External Energy. Two different methods have been used to compute the higher-order energy inputs. Conversion factors developed from input-output data (Herendeen and Bullard 1974) were applied to material dollar costs, after appropriate deflation to the base year of 1967. This method was considered the best available for each material input without employing tedious calculations. However, for fuels and electricity the alternative of iteration combined with empirically derived approximations at or above order three was adopted. This alternative is more precise, and flexible, than the application of conversion factors similar to those used for material energy equivalents.

Energy Product and Energy Loss comprise Eout. Energy Product is defined as the energy of the primary energy form produced by the module, plus the energy of secondary forms produced for outside distribution, plus the energy equivalent of salable byproducts. Energy Loss has been divided into three parts. Physical Loss is the sum of losses of the Principal Energy input due to spillage, leakage, disposal of waste materials, etc. Internal Consumption is the energy required from Principal Energy to provide heat or power for the process. The third loss category is External Loss. Normally this is the sum of the external energy inputs. In some circumstances, however, an external energy input will be incorporated in the Energy Product, e.g. additives to petroleum products; and then the External Loss will be less than the External Energy input.

Modules are combined simply by adjusting the Energy Product of one modules to equal the Principal Energy of the following module, and so on. This automatically requires a corresponding change in the External Energy, the Energy Loss, and the Principal Energy of the first module. Finally, totals for an integrated fuel system, a sequential combination of seven modules, are: (1)Principal Energy--the intial Principal Energy input, (2)External Energy--the sum of External Energy inputs of each normalized module, (3)Energy Loss--the sum of Energy Loss outputs of each module, and (4)Energy

Product-- the final Energy Product output plus the sum of byproduct energies of each module.

Coal Liquefaction Systems Studied

Three proposed coal liquefation facilities were examined in this study, for inclusion in a hypothetical integrated synfuels module string. Data on solvent refined coal, pyrolysis with char gasification and catalytic conversion of coal from engineering studies were utilized to perform the net energy analysis. A brief technical description of each process is given below.

Solvent refined coal (1,2,3,4,5,6) is a process by which coal is converted to a clean boiler fuel by mild hydrogenation in the presence of a solvent. Products of this process are sulfur, naphtha a fuel oil and a heavy liquid or solvent refined coal, which has a higher heating value of approximately 16,000 BTU/lb. Included in the system boundary for this proposed plant are an oxygen plant and filter cake gasification plant to produce process hydrogen, an electric generating power plant for process electricity, a coal preparation plant, and waste water and gas cleanup facilities.

Pyrolysis of coal (7,8,9) was also studied for net energy conversion. The process examined produced both pipeline quality natural gas and a synthetic crude oil, suitable for upgrading in a refinery. Coal is pyrolyzed in multistage fluid-bed reactors, resulting in gas, liquid, and solid (char) fractions. Char is utilized in a low-pressure gasification reactor to produce process hydrogen necessary for upgrading of the pyrolytic liquids. Battery limits of the plant include an oxygen plant and a char gasification facility, a process plant for electric utility generation, and gas gas scrubbing and waste water cleanup subsystems.

The third system studied was catalytic coal conversion (10,11,12). This process produces both a high-quality synthetic crude oil and a high-BTU pipeline gas. The syncrude is suitable for further refining to gasoline and other hydrocarbon products. A coal-solvent mixture is hydrogenated in an ebullating catalyst bed, forming gaseous and liquid byproducts. The process, as entailed in the energy balance includes a coal gasification subsystem for generation of process hydrogen, a coal preparation plant, and gas scrubbing and waste water treatment facilities.

Figure 2- MODULE ENERGY BALANCES

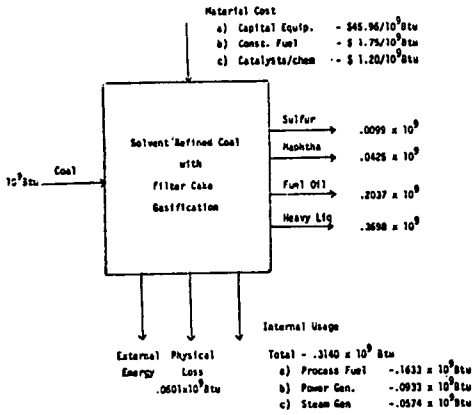

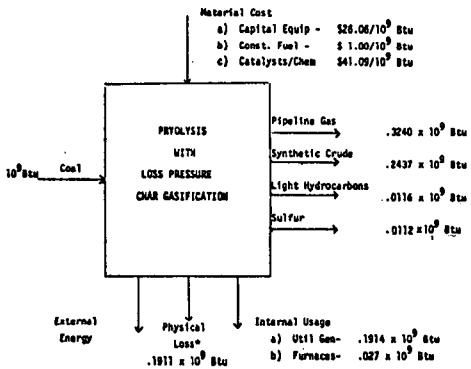

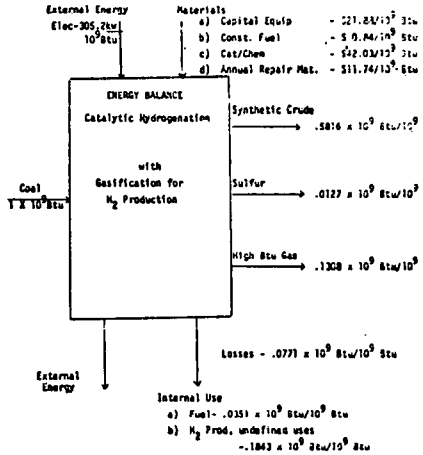

*Physical Loss and Undefined Internal Use

Energy Ratios

The subjects of net enrgy and of net-energy ratios have provoked more heat and less light perhaps than any other feature of the area of energy analysis. Several different ratios have been advanced as the answers to questions of how well one energy system performs relative to another. Objections to energy ratios generally have centered around undifferentiated aggregations of different energy forms -- electricity, petroleum, natural gas, coal. It has been pointed out many times that the value of energy is determined by many other factors than heat content. These arguments are sound, but they only show that ther is no completely adequate standard of comparison among energy systems. With this qualification in mind, we define three different net energy ratios which address three different questions of legitimate concern to the public and their decision-makers.

The net-energy ratio R_1, for an integrated energy system, is defined as the Energy Product divided by External Energy. The ratio R_1 addresses the question, "How much energy is required from other energy delivery systems to support this energy system?" The net-energy ratio R_2 is defined as Energy Product divided by Energy Loss. The ratio R_2 addresses the question of energy system process efficiency. The net-energy ratio R_3 is defined as Energy Product divided by the sum of Energy Loss and Extraction Loss. The ratio R_3 addresses the question of how efficiently natural resources are being used. These three ratios can be helpful in determining the performance of an integrated energy fuel system if care is employed in their use. Two systems should be compared only if their end fuel products are the same or, alternatively, if their final services are the same.

With this qualification in mind, we determined the following net-energy ratios for coal liquefaction plants only. The ratio R_3 does not apply since extraction is not included.

	R_1	R_2
Solvent refined coal	128.21	1.65
Pyrolysis	44.97	1.40
Catalytic hydrogenation	18.49	2.17

These results are not directly comparable, because the plant products are different in each case. However, general conclusions can be drawn. First, coal liquefaction plants produce many times as much energy as they require from external sources. Second, a plant which is more independent of external sources consequently yields a higher R_1, but is not necessarily more process efficient. And third, changes in process details can largely alter net energy ratios, e.g. sustitution of imported power for internally generated power in the Solvent refined coal process would lower R_1 by an order of magnitude.

References Cited

1. Janning, C. E., and E. M. Magee, Evaluation of Pollution Control in Fossil Fuel Conversion Processes, Liquefaction: Section2 - SRC Process, EPA - 650/2-74-009-f, Exxon Research and Enginnering Company, Linden, New Jersey (March 1975).
2. Demonstration Plant, Clean Boiler Fuels from Coal, Preliminary Design/Capital Cost Estimate, OCR R&D Report No. 82 - Interim Report No. 1, Vol I & II, R. M. Parsons Company, Los Angeles, CA
3. Pittsburgh and Midway Coal Company, Economic Evaluation of a Process to Produce Ashless, Low-sulfur Fuel from Coal: R&D Report No. 53, Interim No. 1, Office of Coal Research, U. S. Dept. of Interior, Washington, D. C. (1970).
4. _____, Development of a Process for Producing an Ashless, Low-sulfur Fuel from Coal: R&D Report No. 53, Interim No. 2, Office of Coal Research, U. S. Dept. of Interior, Washington, D. C. (1971).
5. _____, Development of a Process for Producing an Ashless, Low-sulfur Fuel from Coal - Volume I - Engineering Studies, Part II C. O. G. Refinery Economic Evaluation, Phase I: R&D Report No. 53, Interim No. 3, Office of Coal Research, U. S. Dept. of Interior, Washington D. C. (1971).
6. _____, Development of a Process for Producing an Ashless, Low-sulfur Fuel from Coal - Volume I - Enginerring Studies, Part 3, C. O. G. Refinery Economic Evaluation, Phase II: R&D Report No. 53, Interim No. 4, Office of Coal Research, U. S. Dept of Interior, Washington, D. C. (1972).
7. Kalfadelis, C. D., and E. M. Magee, Evaluation of Pollution Control in Fossil Fuel Conversion Processes: Section I: COED Process, EPA Contract No. 68-02-0629, Exxon Research and Engineering Co., Linden, N. J. (Jan 1975).
8. Scotti, L. J., et al., Char Oil Energy Development, OCR R&D Report No. 73 - Interim No. 2, FMC Corp., Princeton, N. J. (1974).
9. Shearer, H. A. and A. L. Conn, Economic Evaluation of COED Process Plus Char Gasification, OCR Contract No. 14-32-0001-1210, American Oil Co., Whiting, Ohio (1972).
10. Project H-Coal Report on Process Development, OCR R&D Report No. 26, Hydrocarbon Research, Ind., Trenton, N. J. (1968).
11. Johnson, C. A., et al, Present Status of the H-Coal Process, paper presented at the FTG Symposium on Clean Fuels from Coal, Hydrocarbon Research Inc., Trenton, N.J (1975).
12. Johnson, C. A., et al, Scale-up Factors in the H-Coal Process, Coal Processing Technology, AIChE, New York, New York (1974).

A COMPARATIVE NET ENERGY ANALYSIS OF FUEL OIL PRODUCTION FROM CRUDE OIL AND OIL SHALE

Alton J. Frabetti, Jr.; James D. Westfield; Morton Gorden

DEVELOPMENT SCIENCES INC., East Sandwich, Massachusetts

Public Law 93-577

As the issues surrounding energy policy formation proliferate, attention has been called to the concept of "net energy" as noted in PL 93-577 (Federal Non-nuclear Energy Research and Development Act of 1974). The relevant section of the Act is as follows:

> "The potential for production of net energy by the proposed technology at the stage of commercial application shall be analyzed and considered in evaluating proposals."

The concern for net energy, basically the amount of energy that it takes to deliver energy in usable form, has been voiced because, as we run short of petroleum and as we seek national self-sufficiency, the new technologies that we employ to extract and transform energy require an energy penalty themselves. Thus, as we climb the curve of energy output, the diminishing returns will push us into a more and more rapid rate of resource depletion and cost penalty, perhaps forcing a re-evaluation of consumer demand schedules. The phrase "net energy" was developed because new forms of energy may cost more energy to get than they pay back.

Methodology

This paper is based on a study sponsored by the U. S. Department of the Interior (Reference 1). Data for other fuel supply pathways also are presented in Reference 1. The goal of this study was to calculate the true energy costs to society associated with the delivery of a given amount of usable energy (1000 Btu) by various energy supply systems. To be included as part of the energy costs were not only the direct process energy requirements but also the indirect costs associated with the production of the process energy itself and with the production of the plant operating supplies and (amortized) capital equipment.

Existing methods of energy analysis were reviewed. These fell into three broad categories: vertical analysis, pure Input/Output energy analysis, and the approach known under the general name of eco-energetics, developed by H. Odum. Vertical analysis -- detailed tracing of each equipment input back to its resource form -- was considered to be too tedious. Pure Input/Output analysis, using statistical data associated with the current United States economy, could not per se reflect the effects of the newer or future energy technologies. The eco-energetics approach was not utilized because the concepts and procedures are not sufficiently developed at the present time.

It finally was decided to use a combination of process analysis and Input/Output theory, the first time that this hybrid approach has been taken. Process analysis was used to treat the direct process energy contributions, and Input/Output coefficients were utilized to treat the indirect capital energies.

The various steps associated with each energy delivery pathway were analyzed in a modular fashion, converting each of the external direct and indirect energy inputs as described above (Figure 1). These then were combined, with the appropriate

transportation steps included, to give complete energy delivery pathways (Figure 2). Provisions were included in each pathway to transport raw materials and water to the plant site, when necessary, and also to bring all products and by-products to central distribution points. By-product energy values were generally determined but not added to the resource energy output. The primary exception to this was in the oil pathway, where all refinery products were included as part of the resource yield. Equipment and operating energies associated with final product distribution (e.g., an oil delivery truck) were not included.

The dramatic effects that the many decisions associated with the construction of each energy pathway can have on the results should be noted at this point. These variations fall into three major categories: deposit-related, process-related, and assumption-related (Figure 3). In the case of the deposit-related variations, the deposit quality can strongly affect the resulting in situ resource consumption and energy subsidy. Similarly, the targeted extent of resource recovery and the location of the various plants along the energy pathway can significantly affect the results.

Pathway for Fuel Oil from Crude Oil

The data for the fuel oil from crude pathway were drawn from United States national industry totals for the year 1972 in order to establish volumes, operating costs, and current investments in as comprehensive a manner as possible. References 2 - 4 were the primary data sources. At the early stages of the supply pathways, oil and gas production are highly associated. For example, about 22 percent (1972 basis) of the energy from oil wells is in the form of gas. Similarly, in every 1000 Btu of refinery product, there are 126 Btu of liquids from natural gas plants. These effects were taken into account and corrected for when calculating the resource flows and external energy subsidies associated with R&D, extraction, etc.

The data for the fuel oil from crude pathway are summarized in Table 1. The first column traces the crude from its in situ state to its final energy form normalized to 1000 Btu output. The diminution of resource in a step can be due to true loss (e.g., by evaporation or spillage) or to actual internal consumption of the resource within the step. The 2954.4 Btu of initial in-ground crude resource also includes the crude left behind in the ground (about 68% of the original deposit for primary and secondary recovery). The liquid gas plant products (126.3 Btu) are added to the oil resource flow. The resource loss of about 70 Btu in the refining step represents primarily internal consumption of oil in the various process units and auxiliary units.

The components of the external energy subsidy are displayed in the next two columns for each step in the pathway, again all normalized to support 1000 Btu of fuel output. External energy is (somewhat arbitrarily) defined as all energy delivered to the plant from outside the plant boundaries. The energy subsidy is divided into operating and capital components. The operating energy component includes direct process energy and indirect energy embodied in operating supplies and maintenance. Direct electricity use is converted at a rate of 11,405 Btu/kwh. Land reclamation energies also are included as part of the operating energies. The capital component includes the amortized capital equipment and plant construction-related energies.

The I/O energy coefficients for estimating energy implicit in material and equipment, expressed as Btu/$, were taken from the 1967 data in Reference 4 with suitable correction factors applied for inflation, U. S. energy intensity (i.e., coal versus crude), etc. The coefficients all were normalized to 1974 dollars. Typical corrected coefficient values ranged from about 40,000 Btu/$ for general

construction activity to about 60,000 Btu/$ for major items of chemical plant equipment. The catalysts and chemicals category, in particular, had a very high energy coefficient of about 170,000 Btu/$. For the purposes of evaluating capital energies from these I/O energy coefficients, the plant capital cost was typically disaggregated into 5 - 10 subcategories. In Reference 1, the indirect capital and material-related energies are further disaggregated into their three basic components -- Btu from coal, oil plus gas, and hydro plus nuclear.

The fuel oil portion of the refinery product slate is about 6.11 percent by volume (1972 basis) but consumes only about 3.4 percent of the total refinery operating and capital energies for its production (Reference 1). The external operating energy subsidy for fuel oil production in the refinery is the largest subsidy in Tabel 1 (35.58 Btu). About 80 percent of this purchased energy is natural gas, and the remainder is primarily electricity. Another significant external subsidy is the 6.75 Btu associated with well drilling and with the well capital equipment.

In summary, 2954.4 Btu of reserve (crude) and 48.68 Btu of external energy are utilized to produce 1000 Btu of fuel oil. The tertiary oil recovery pathway also was examined in Reference 1. For this pathway, 117.32 Btu of external subsidy are consumed per 1000 Btu of fuel oil output, due primarily to the high chemicals consumption associated with the tertiary recovery operation.

Pathway for Fuel Oil from Oil Shale

This analysis is based primarily on an economic evaluation of shale oil production by the U. S. Department of the Interior utilizing the so-called gas combustion retort process (Reference 6). The hypothetical oil shale processing complex is located in Colorado and consists of three mines, three retorting plants, and a refinery to produce a semi-refined oil at a rate of 100,000 B/D.

The average oil content of the shale rock is 30 gallons/ton. The mines are underground mines with mining by the conventional room and pillar technique. About 44 T/D of explosives are required. The electrical power for the mine and process plants is generated within the mine/plant complex.

The crude shale oil from the retorts flows by pipeline to the refinery, a distance of about 40 miles. The excess low-Btu gas from the retorts also is piped to the refinery for use as process fuel and for power generation. Part of the spent shale is slurried and pumped back into the mines, and the remainder is deposited in a canyon.

In the refinery, the crude is heated and charged to a distillation column where it is separated into overhead and bottoms fractions (about 50 percent overhead). The overhead fraction is depropanized to yield distillate at a rate of 52,345 barrels per calendar day.

The bottoms fraction from the distillation column is fed to delayed coking units. The distillate product from the cokers is cooled, depropanized, and charged to hydrogenation along with the crude distillation tower overhead fraction. The coke from the drums, 1710 tons per calendar day, is stored for sale. The hydrocrackers produce a product containing about 60 volume percent material in the gasoline boiling range. The uncondensed gas is used for plant fuel, and the liquid hydrogenated product (100,000 barrels per calendar day) is pumped to storage.

The gas streams from the hydrogenation, delayed coking, and distillation contain sulfur and nitrogen, in the form of hydrogen sulfide and ammonia, available for recovery. The hydrogen sulfide is ultimately processed in a Claus unit to yield

85.5 tons per calendar day of sulfur. The ammonia is recovered in liquid form to yield 275.5 tons per calendar day.

A portion of the above gas streams, after hydrogen sulfide and ammonia removal, is passed to a hydrogen plant to supply hydrogen for hydrogenation, and the remainder is utilized for process fuel and on-site power generation, supplemented by 3.61 MM SCF per calendar day of purchased natural gas.

The resource path for the oil shale system is shown in the first column of Table 2. By analogy with underground coal mining, 43 percent of the resource was assumed to be left in the ground (e.g., as pillars in the mine). The heat content of the by-products (coke, sulfur, and ammonia) was not included as part of the resource output, although it was equivalent to about 8 percent of the product oil energy.

The external subsidies are shown in the next two columns of Table 2. Because the mines and plants are designed as a single, integrated complex, it was not possible to separate the subsidies. For example, power used in the mine is generated at the refinery utilizing both excess low-Btu retort gas and purchased natural gas. This excess retort gas represents an internal resource consumption.

The external operating subsidy of 32.9 Btu is shown in detail in Table 3. The subsidies are seen to be fairly evenly distributed among such items as purchased natural gas, catalyst and chemicals, and explosives. The oil transport step assumed a 500-mile pipeline, of which 300 miles was existing and 200 miles represented new construction.

Comparison of Crude Oil and Oil Shale Results

At first glance, the oil shale external subsidy of 39.1 Btu per 1000 versus the crude oil subsidy of 48.7 would appear to indicate that oil from oil shale requires less external energy than oil from crude oil. However, the shale oil pathway was designed, in effect, to minimize the external subsidies, but the crude pathway was not. For example, about 180,000 kw of power are generated within the shale mine-plant complex. Converted at 11,405 Btu/kwh, this corresponds to an additional subsidy of about 80 Btu per 1000 Btu output if it were purchased from outside the plant. Of course, at least a part of the current natural gas subsidy of 6.2 Btu per 1000 Btu would be eliminated. The resulting total external subsidy for the external power purchase pathway would be on the order of 113 - 119 Btu per 1000 Btu, which is seen to be significantly greater than that for crude oil.

It should be noted that all of the above subsidies indirectly reflect the relatively low "energy to produce energy" of the United States economy over the last decade. Stated differently, the steel used, for example, in the shale processing equipment was produced using easy-to-obtain energy. As some of the above newer, more energy-intensive energy supply systems permeate the economy, these higher order energy effects will start to increase all of the external subsidies and resource consumptions.

REFERENCES

1. "A Study to Develop Energy Estimates of Merit for Selected Fuel Technologies," report to the U. S. Department of the Interior, Office of Research and Development, Contract No. 14-01-001-2141, September 23, 1975.

2. Bureau of Mines, U. S. Department of the Interior, Washington, D. C., "Mineral Industry Surveys: Crude Petroleum, Petroleum Products and Natural-Gas-Liquids: 1972," prepared December 21, 1973.

3. American Gas Association, Arlington, Virginia, "1973 Gas Facts, A Statistical Record of the Gas Utility Industry."

4. American Petroleum Institute, Washington, D. C., "Petroleum Facts and Figures, 1971 Edition;" "Annual Statistical Review, U. S. Petroleum Industry Statistics, 1956 - 1972;" "Joint Association Survey of the U. S. Oil and Gas Producing Industry, Section I - Drilling Costs, Section II - Expenditures for Exploration, Development, and Production," February 1975.

5. Herendeen, R. L.; Bullard, C. W., III; "Energy Cost of Commerce Goods, 1963 and 1967," CAC Document No. 140, Center for Advanced Computation, University of Illinois at Urbana-Champaign, November 1974.

6. Report No. 75-4, "Oil Shale - 1974, An Economic Evaluation Using 30 Gallon Shale and Producing 100,000 Barrels per Calendar Day of Shale Oil," Process Evaluation Group, Bureau of Mines, Morgantown, West Virginia, September 1974.

Table 1

SUMMARY - FUEL OIL PRODUCTION

Basis: 1,000 Btu Output

Pathway Step	Resource Remaining (Btu)	Energy Subsidy (Btu) Operating	Capital	Total
In ground	2954.4 (start)	-	-	-
Research & Exploration	-	1.06	-	1.06
Production	945.4	2.58	6.75	9.33
Gathering	945.1	0.01	0.13	0.14
Add Natural Gas Plant Prod.	126.3	0.02	0.08	0.10
Available	1071.4			
Crude Pipeline	1070.8	0.06	0.54	0.60
Refinery Input	1070.5			
Refinery Output	1000.3	35.58	1.31	36.89
Product Pipeline	1000.0	0.05	0.51	0.56
TOTAL		39.36	9.32	48.68

Table 2

SUMMARY - OIL SHALE

Basis: 1,000 Btu Output

Pathway Step	Resource Remaining (Btu)	Energy Subsidy (Btu) Operating	Capital	Total
	2614.5* (start)	-	-	-
R & D	2614.5	3.6	-	3.6
Mine	1490.3***	(**)	(**)	(**)
Plant Complex	1000.0	23.5	6.0	29.5
Transport	1000.0	5.8	0.2	6.0
TOTAL		32.9	6.2	39.1

* In ground
** Included as part of plant complex
*** Resource at mine mouth

Table 3 OIL SHALE OPERATING SUBSIDIES

	SUBSIDY (BTU)
R&D; EXPLORATION	3.6
NATURAL GAS	6.2
CATALYST AND CHEMICALS	5.9
MAINTENANCE	2.4
GENERAL SUPPLIES	2.0
EXPLOSIVES	3.4
BY-PRODUCT COKE	(73.7)
BY-PRODUCT SULFUR AND AMMONIA	(6.5)
TRANSPORT (BY-PRODUCTS)	3.5
TRANSPORT (OIL)	5.8
LAND RECLAMATION	0.1
	32.9

Figure 1

RESOURCE AND ENERGY FLOWS FOR A TYPICAL STEP

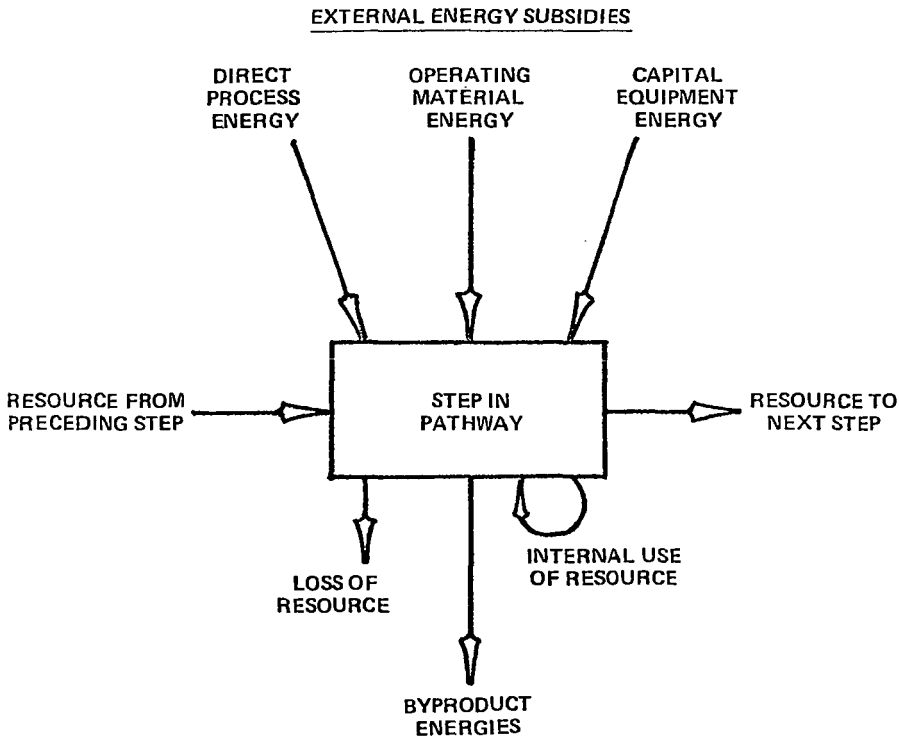

Figure 2 - ENERGY SUPPLY PATHWAY

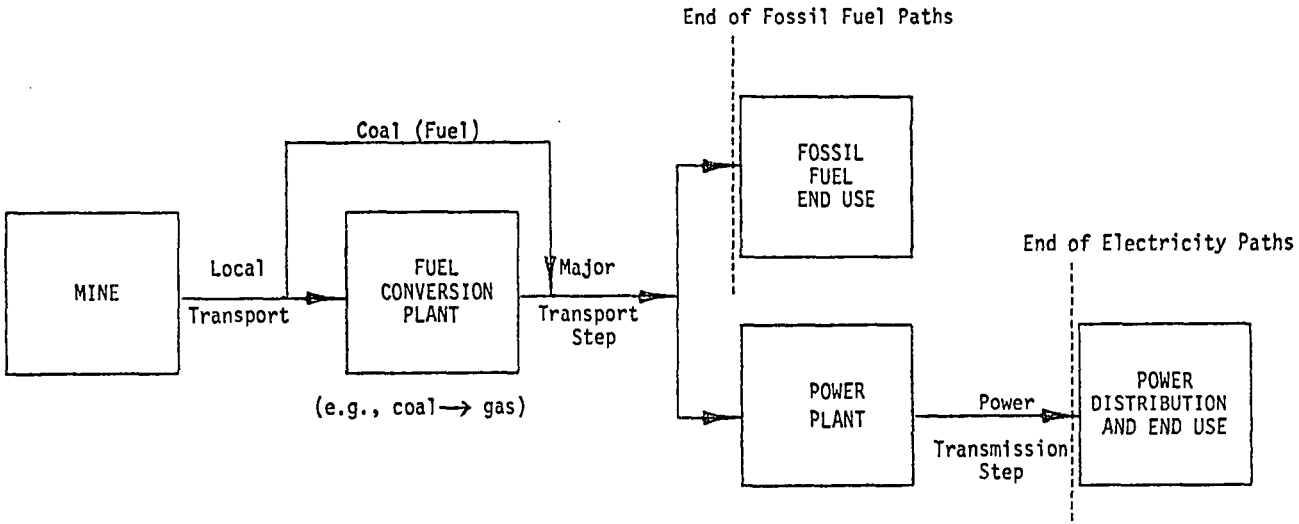

Figure 3

PATHWAY VARIATIONS

Deposit-Related Variations

Location of Deposit

Depth of Deposit

Thickness of Seam

Quality of Deposit

(Oil Content of Shale)

(Intensity of Solar Radiation)

Process-Related Variations

Extent of Recovery of Resource

State of Development of Technology

(Primary Vs. Tertiary Oil Recovery)

(Room and Pillar vs. Longwall Mining)

(Lurgi vs. Hygas for Coal Gasification)

(Surface Retorting vs. Modified In Situ for Oil Shale)

(Gas Centrifuge vs. Gaseous Diffusion for Nuclear)

Pathway Assumption-Related Variations

Location: Mine/Conversion Plant/Power Plant/Ultimate Use

Transportation: Raw Materials/Water/Products/By-products

New vs. Existing Transportation Facilities: Rail/Pipeline