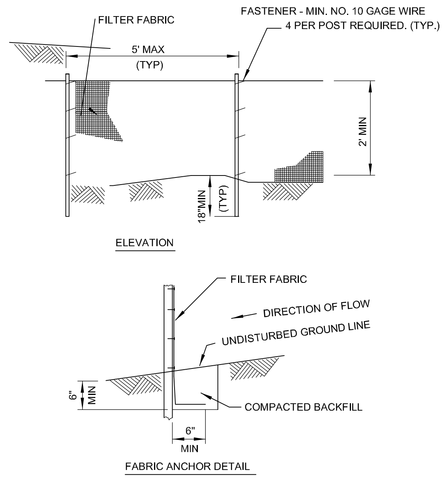

NOTES:

1. TEMPORARY SEDIMENT FENCE SHALL BE INSTALLED PRIOR TO ANY GRADING WORK IN THE AREA TO BE PROTECTED, THEY SHALL BE MAINTAINED THROUGHOUT THE CONSTRUCTION PERIOD AND REMOVED IN CONJUNCTION WITH THE FINAL GRADING AND SITE STABILIZATION.
2. FILTER FABRIC SHALL MEET THE REQUIREMENTS OF MATERIAL SPECIFICATION 592 GEOTEXTILE TABLE 1 OR 2, CLASS WITH EQUIVALENT OPENING SIZE OF AT LEAST 30 FOR NONWOVEN AND 50 FOR WOVEN.
3. FENCE POSTS SHALL BE EITHER STANDARD STEEL POST OR WOOD POST WITH A MINIMUM CROSS-SECTIONAL AREA OF 3.0 SQ. IN.
4. PLACE THE END POST OF THE SECOND FENCE INSIDE THE END POST OF THE FIRST FENCE.
5. ROTATE BOTH POSTS AT LEAST 180 DEGREES IN A CLOCKWISE DIRECTION TO CREATE A TIGHT SEAL WITH THE FABRIC MATERIAL.
6. DRIVE BOTH POSTS A MINIMUM OF 18 INCHES INTO THE GROUND AND BURY THE FLAP.

2 SILT FENCE

SCALE: NTS

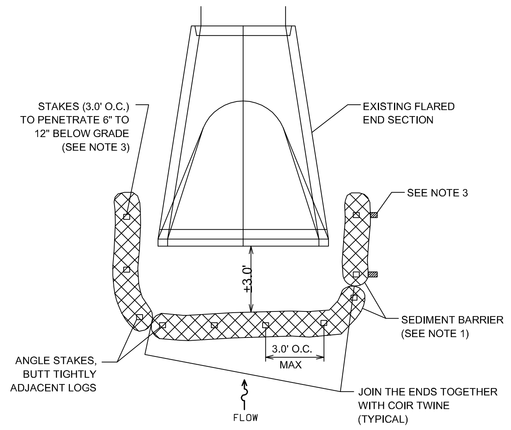

NOTES:

1. COIR LOGS, GRAVEL BAGS (OR APPROVED EQUAL BY THE ENGINEER) EROSION CONTROL AND SEDIMENT BARRIER MATERIAL SHALL BE USED.
2. SEDIMENT BARRIERS SHALL BE PLACED WITH ENDS TIGHTLY ABUTTING THE ADJACENT SEDIMENT BARRIERS TO CREATE A CONTINUOUS BARRIER.
3. WOODEN WEDGES AND/OR STAPLES AS PER MANUFACTURER'S PRODUCT SPECIFICATIONS MAY BE USED FOR SEDIMENT BARRIER STABILIZATION.
4. INSPECTION OF SEDIMENT BARRIERS SHALL BE AT LEAST ONCE PER WEEK AND AFTER RAIN EVENTS IN EXCESS OF HALF INCH (1/2") PER DAY OR EQUAL SNOW MELT. REPAIR OR REPLACEMENT OF SEDIMENT BARRIER SHALL BE MADE PROMPTLY AS NEEDED.
5. REMOVE ACCUMULATED SEDIMENT WHEN SEDIMENT DEPTH AT THE BARRIER IS APPROXIMATELY EQUAL TO ONE-HALF OF BARRIERS HEIGHT.
6. SEDIMENT BARRIERS SHALL BE REMOVED UPON COMPLETION OF CONSTRUCTION.

3 FLARED END SECTION SEDIMENT BARRIER

SCALE: NTS

STABILIZED CONSTRUCTION ENTRANCE PLAN

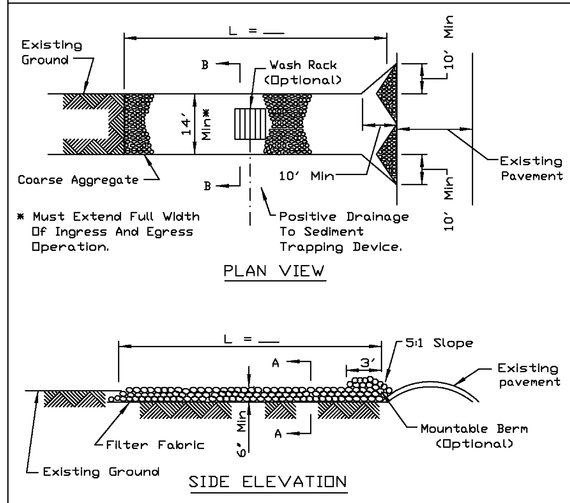

NOTES:

1. Filter fabric shall meet the requirements of material specification 592 GEOTEXTILE, Table I or 2, Class I, II or IV and shall be placed over the cleared area prior to the placing of rock.
2. Rock or reclaimed concrete shall meet one of the following IDOT coarse aggregate gradation, CA-1, CA-2, CA-3 or CA-4 and be placed according to construction specification 25 ROCKFILL using placement Method 1 and Class III compaction.
3. Any drainage facilities required because of washing shall be constructed according to manufacturers specifications.
4. If wash racks are used they shall be installed according to the manufacturer's specifications.

REFERENCE			
Project			
Designed	Date	NRCS Natural Resources Conservation Service	STANDARD DWG. NO. IL-630
Checked	Date		SHEET 1 OF 2
Approved	Date		DATE 8-18-94

4 CONSTRUCTION ENTRANCE WITH GRAVEL WASH DOWN AREA

SCALE: NTS

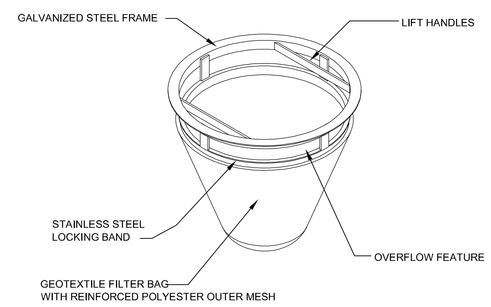

5 FILTER BASKET

SCALE: NTS

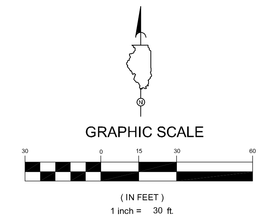

LEGEND AND ABBREVIATIONS:

PL	PROPERTY LINE
	CONCRETE PAVEMENT AND BASE
	CONCRETE WALK AND BASE
	ASPHALT PAVEMENT AND BASE
	BUILDING
	STORMWATER RUN-OFF
	MAINTAIN EXISTING FILTER BASKET
	PROVIDE FILTER BASKET
	PROVIDE SEDIMENT BARRIER
X	SILT FENCE
10.00	CONTOUR
	CATCH BASIN (CB)
	MANHOLE (MH)
	FLARED END SECTION (FES)
>	STORM LINE
LS	LIFT STATION
APCF	ADVANCED PROTEIN CRYSTALLIZATION FACILITY
USGS	U.S. GEOLOGICAL SURVEY
FFE	FINISHED FLOOR ELEVATON
TYP	TYPICAL

EROSION CONTROL NOTES:

1. THE SEDIMENTATION AND EROSION CONTROL MEASURES SHALL BE IN ACCORDANCE WITH THE STANDARDS AND SPECIFICATIONS FOR SOIL AND SEDIMENTATION CONTROL OF LOCAL GOVERNMENT AGENCIES, PROCEDURES AND STANDARDS FOR URBAN SOIL AND SEDIMENTATION CONTROL IN ILLINOIS, AND IEPA STANDARDS AND SPECIFICATIONS FOR SOIL EROSION AND SEDIMENT CONTROL, LATEST EDITION.
2. A COPY OF THE APPROVED EROSION AND SEDIMENT CONTROL PLAN AND SWPPP SHALL BE MAINTAINED ON THE SITE AT ALL TIMES.
3. PRIOR TO COMMENCING LAND-DISTURBING ACTIVITIES IN AREAS OTHER THAN INDICATED ON THESE PLANS (INCLUDING BUT NOT LIMITED TO, ADDITIONAL PHASES OF DEVELOPMENT AND OFF-SITE BORROW OR WASTE AREAS) A SUPPLEMENTARY EROSION CONTROL PLAN SHALL BE SUBMITTED TO THE ENGINEER FOR REVIEW.
4. THE CONTRACTOR IS RESPONSIBLE FOR INSTALLATION OF ANY ADDITIONAL EROSION CONTROL MEASURES NECESSARY TO PREVENT EROSION AND SEDIMENTATION AS DETERMINED BY THE ENGINEER.
5. DURING DEWATERING OPERATIONS, WATER WILL BE PUMPED INTO SEDIMENT BASINS OR SILT TRAPS. DEWATERING DIRECTLY INTO THE FIELD TILES OR STORMSEWER IS PROHIBITED.
6. PERMANENT OR TEMPORARY SOIL STABILIZATION MUST BE APPLIED WITHIN 15 CALENDAR DAYS OF THE END OF ACTIVE SOIL DISTURBANCE.
7. FILTER BASKETS SHALL BE INSTALLED AND MAINTAINED AROUND THE INLET AND OUTLET STRUCTURES AS SPECIFIED.
8. SEDIMENTATION BASINS, BARRIERS, AND ALL APPROPRIATE EROSION CONTROL MEASURES SHALL BE INSTALLED PRIOR TO ANY SORT OF SITE DISTURBING, SEE SHEET C0.0.3.
9. THE CONTRACTOR SHALL INSPECT EROSION CONTROL MEASURES WEEKLY AND AFTER ANY STORM EVENT IN EXCESS OF 1/2".
10. SHOULD THE VOLUME, VELOCITY, SEDIMENT LOAD, OR PEAK FLOW RATES OF STORMWATER RUNOFF TEMPORARILY INCREASE DURING CONSTRUCTION, THEN ADDITIONAL MEASURES TO PROTECT ADJACENT PROPERTIES SHALL BE UNDERTAKEN.
11. THE TEMPORARY EROSION MEASURES SHALL REMAIN IN PLACE UNTIL ALL THE PERMANENT EROSION CONTROL ITEMS ARE FULLY FUNCTIONAL.
12. GRAVELED ROADS, ACCESS DRIVES, PARKING AREAS OF SUFFICIENT WIDTH AND LENGTH, AND VEHICLES WASHDOWN FACILITIES, SHALL BE PROVIDED TO PREVENT THE DEPOSIT OF SOIL FROM BEING TRACKED ONTO PUBLIC OR PRIVATE ROADWAYS. ANY SOIL REACHING A PUBLIC OR PRIVATE ROADWAY SHALL BE REMOVED CONTINUOUSLY.
13. DUST SCREENING SHALL BE PROVIDED ON ALL CONSTRUCTION FENCING.
14. PROVIDE MINIMUM OF 6" TOP SOIL IN ALL UNPAVED DISTURBED AREAS. ALL RESTORATION IN PUBLIC RIGHT-OF-WAY MUST BE SOD. PLANTING, SEEDING AND SODDING WILL BE PROVIDED BY CONTRACTOR.
15. WATER PUMPED OR OTHERWISE DISCHARGED FROM THE SITE DURING CONSTRUCTION DEWATERING SHALL BE FILTERED.

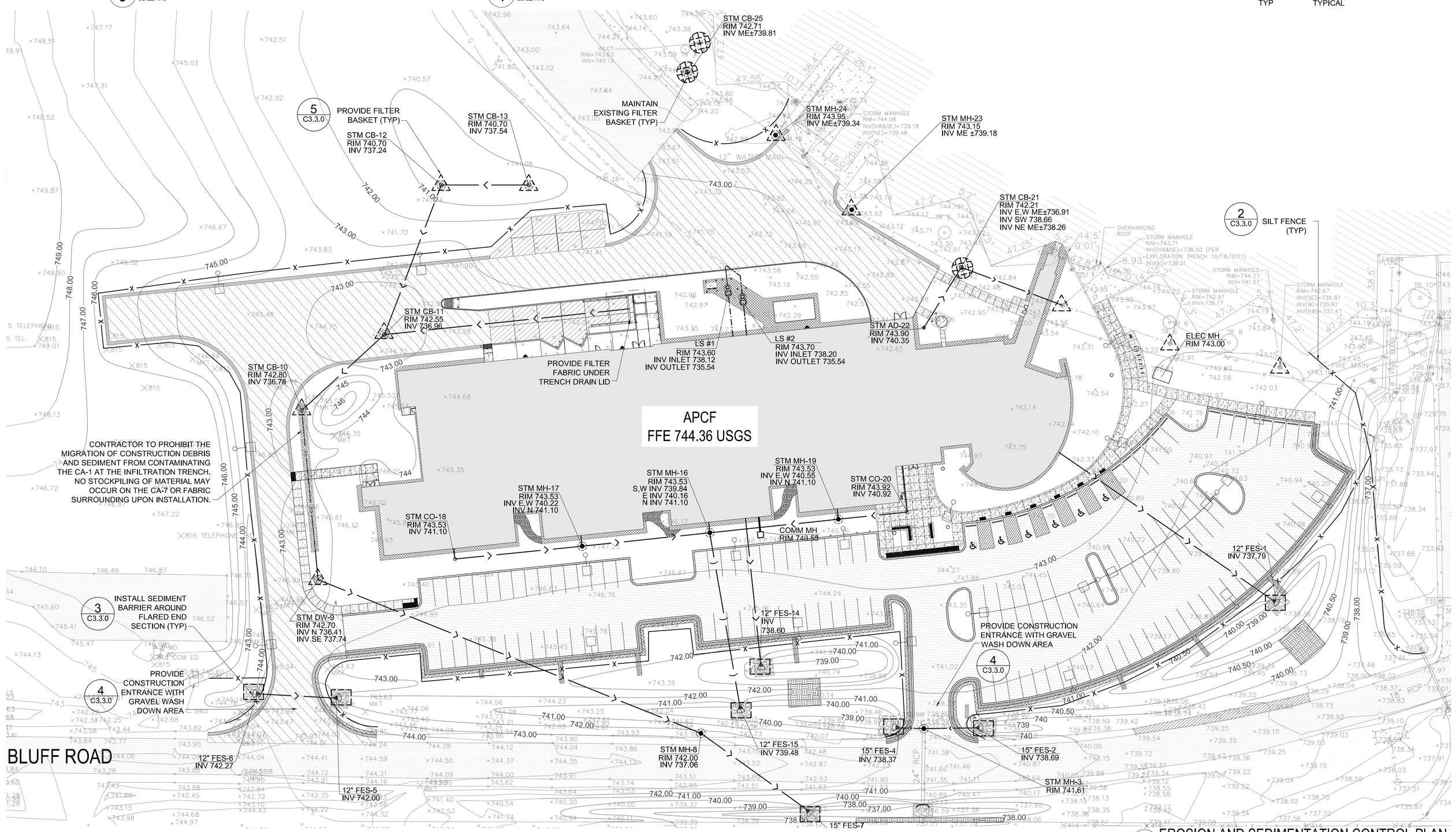

1 EROSION AND SEDIMENTATION CONTROL PLAN

SCALE: 1" = 30'

SMITHGROUP
architecture engineering interiors planning
SMITHGROUP, INC
35 EAST WACKER
SUITE 2200
CHICAGO, IL 60601
T 312.641.0770
F 312.641.6728
www.smithgroup.com

JJR
landscape architecture planning urban design civil engineering environmental science
JJR, LLC
35 EAST WACKER DRIVE
SUITE 2200
CHICAGO, ILLINOIS 60601
312.641.0510 T
312.641.0668 F
www.jjr-us.com

AEI Affiliated Engineers
Affiliated Engineers, Inc.
5802 Research Park Boulevard
Madison, Wisconsin 53719
Tel 608.238.2616 Fax 608.238.2614

Thornton Tomasetti
Thornton Tomasetti, Inc.
330 N. Wabash Avenue, Suite 1500
Chicago IL 60611-7622
T 312.596.2000 F 312.596.2001

TERRA ENGINEERING LTD.
225 West Ohio Street, 4th Floor
Chicago, Illinois 60654
T:(312)467-0123 F:(312) 467-0220

SEALS AND SIGNATURES

JAMIL BOU-SAAB
062-047537
REGISTERED
PROFESSIONAL
ENGINEER
OF
ILLINOIS

KEYPLAN

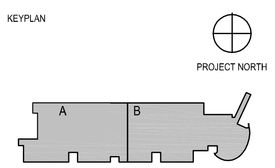

REV. NO.	DESCRIPTION	BY	APVD	DATE
0	ISSUED FOR CONSTRUCTION			07/03/12

Argonne NATIONAL LABORATORY

FMS
Facilities Management Services

PROJECT TITLE: ADVANCED PROTEIN CRYSTALLIZATION FACILITY, ARGONNE NATIONAL LABORATORY

PROJECT NO: 22378.000

DRAWING TITLE

SITE EROSION AND SEDIMENTATION CONTROL PLAN

DESIGNED KM	A/E CADD FILE	FACILITY NO(S)
DRAWN AC/CM	A/E DWG. NO.	
CHECKED KS	CAD NO:	
PROJECT MANAGER ANL - JESSE ADAMS DATE - 07.03.2012	DWG STATE	
	BIND ORDER	
FACILITY DOCUMENT NUMBER		REV. NO.

J446-101-W-C3.3.0

Plot Date: