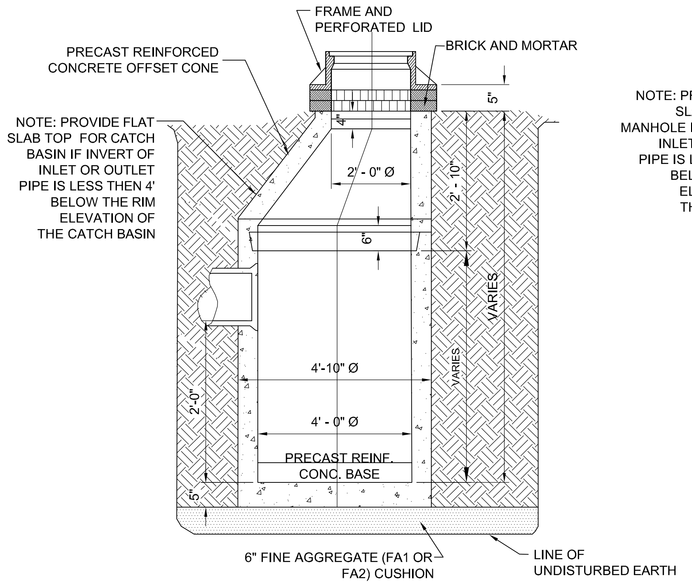

1 CATCH BASIN
SCALE: NTS

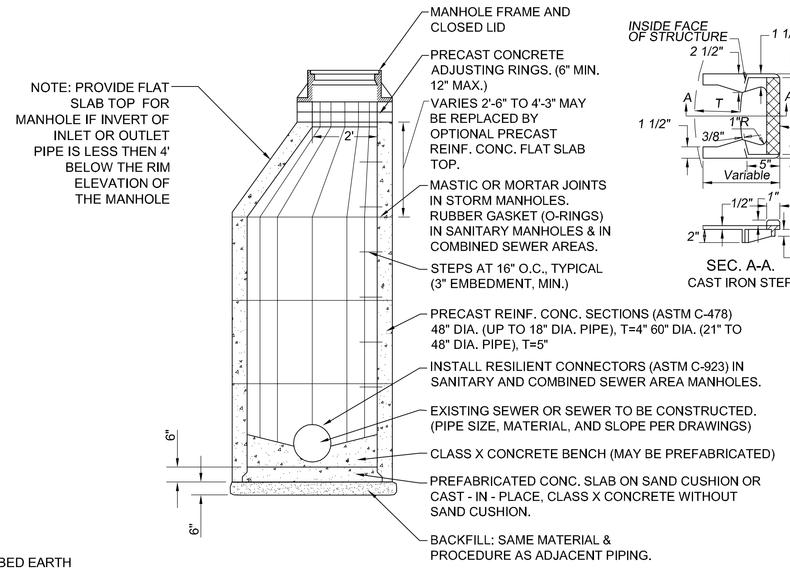

2 MANHOLE
SCALE: NTS

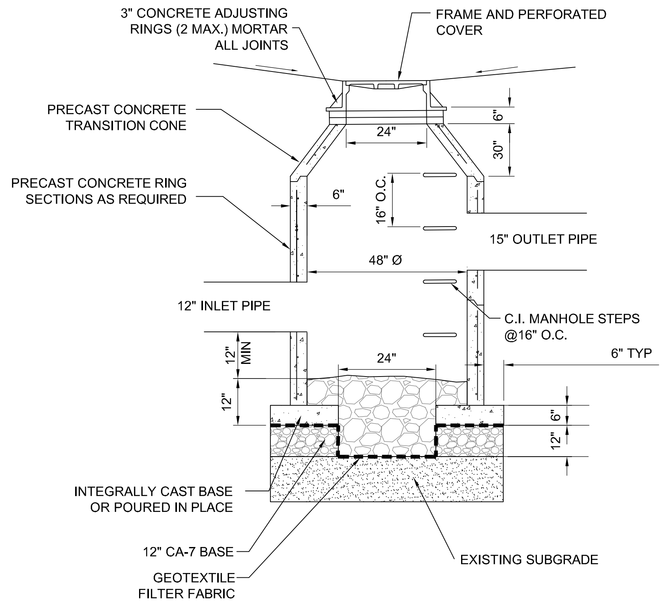

3 DRYWELL
SCALE: NTS

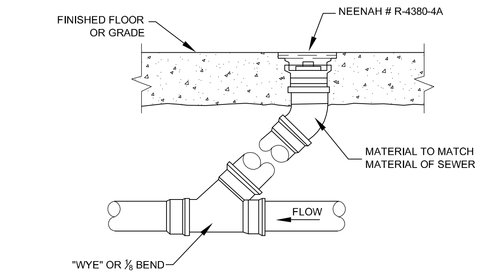

4 AREA DRAIN
SCALE: NTS

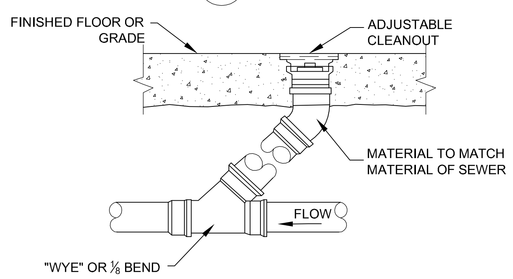

5 CLEANOUT
SCALE: NTS

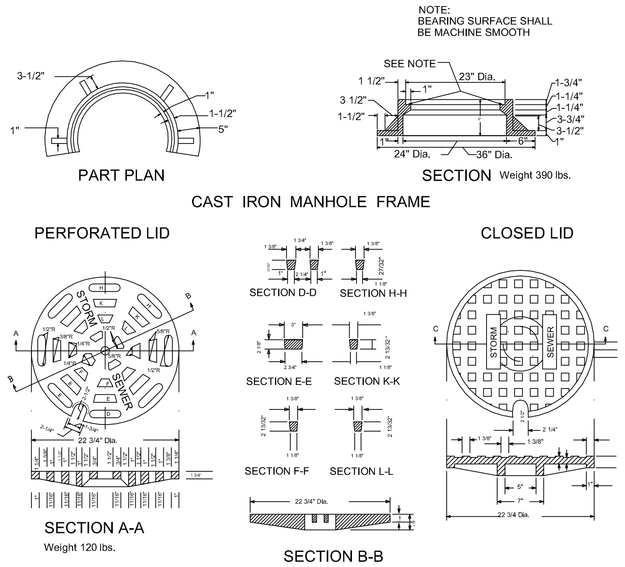

6 STORM SEWER FRAME AND LID
SCALE: NTS

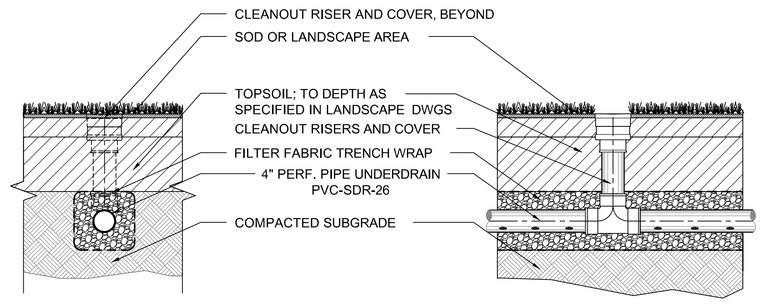

NOTE:

PLACE CLEANOUTS AT CHANGES IN DIRECTION AND AT ENDS OF ALL UNDERDRAINS.

7 PERFORATED PIPE UNDERDRAIN
SCALE: NTS

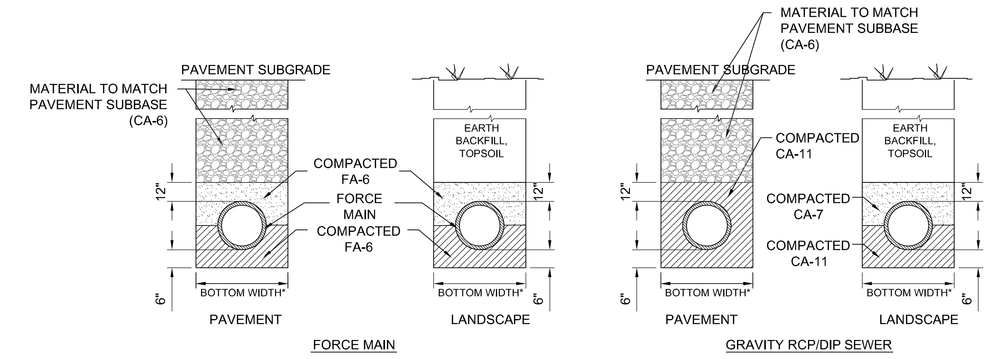

* BOTTOM WIDTH: PIPE SIZES UP TO 24", USE I.D. PLUS 20" OVER 24", USE O.D. PLUS 24".

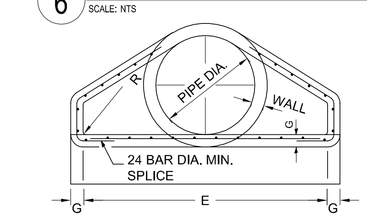

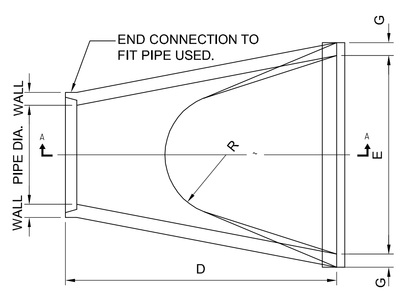

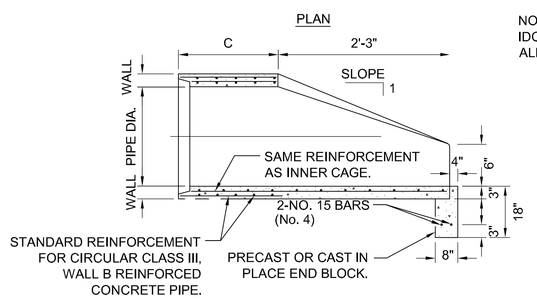

NOTE: PROVIDE STANDARD IDOT GALVANIZED GRATE AT ALL FLARED END SECTIONS

PIPE DIA.	APPROX. QTY. (LB)	WALL	A	B	C	D	E	G	R	APPROX. SLOPE
12"	530	2"	4"	24"	4'-0⅞"	6'-0⅞"	24"	2"	9"	1:2.4
15"	740	2¼"	6"	27"	3'-10"	6'-1"	30"	2¼"	11"	1:2.4

9 FLARED END SECTION
SCALE: NTS

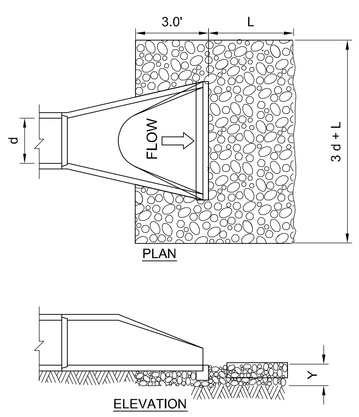

DIMENSIONS TABLE

DIAMETER (d)	3d	3d + L	THICKNESS (Y)	L
12"	3.0'	13.00'	15"	10
15"	3.75'	15.75'	15"	12

NOTES:

1. IDOT GRADATION RR-3 SHALL BE USED FOR SIZES 12"-15".

10 FLARED END SECTION RIPRAP
SCALE: NTS

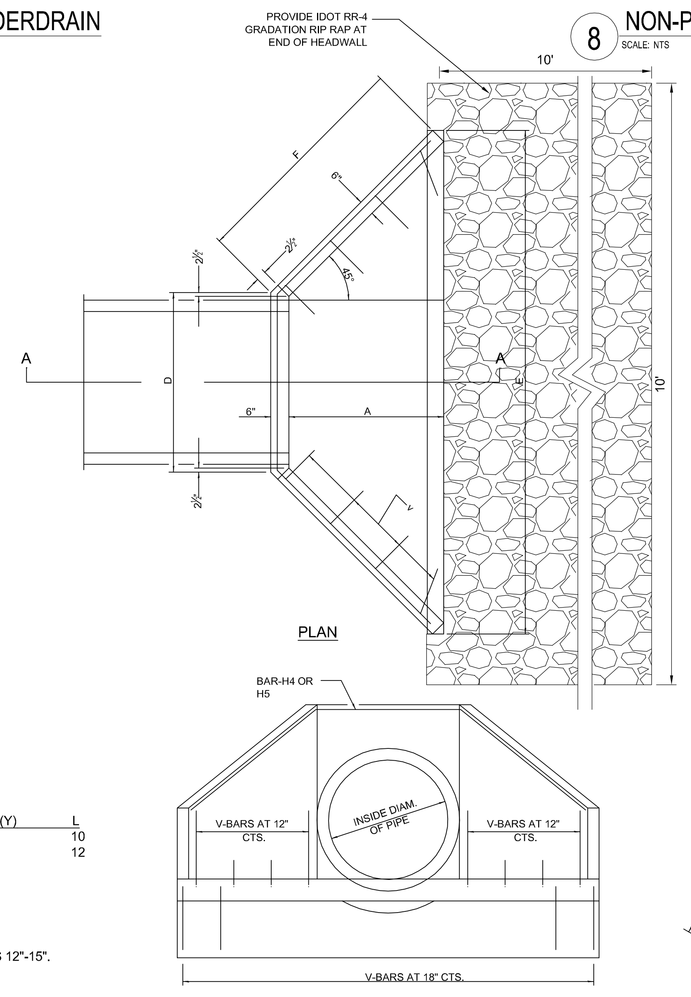

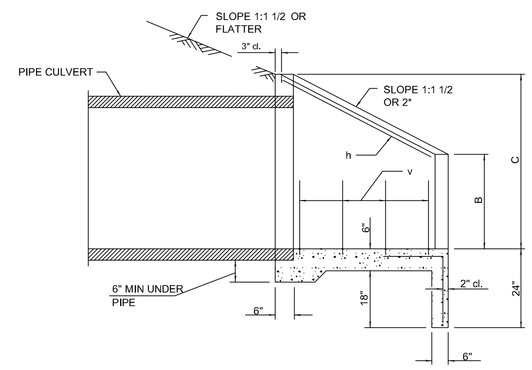

DIMENSIONS

Design No.	Nominal Inside Dia. of Pipe	Slope of Wing Walls	Dimensions A	B	C	D	E	F	Concrete 2 End Secs. cu. yds.	Reinforcement Bars - No. 4 (No. 13) h-Bars Bar	Length	v-Bars No.	Total Wt. 2 End Secs. lbs.
D24-1½	24"	1:1 1/2	25"	16"	33"	35"	7'-4½"	38"	1.5	h_4	9'-3"	22	60
D24-2	24"	1:2	34"	16"	33"	35"	8'-10½"	4'-2½"	2.0	h_5	11'-0"	28	70

DIMENSIONS OF H BARS

Bar	a	b
h_4	33 (840)	39 (990)
h_5	33 (840)	4'-1½" (1.26 m)

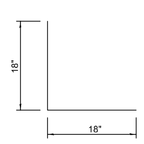

V BAR

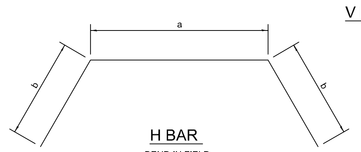

H BAR
BEND IN FIELD
ONE REQUIRED IN EACH HEADWALL

GENERAL NOTES

1. SUBMIT SHOP DRAWINGS OF CONCRETE HEADWALL TO AOR PRIOR TO CONSTRUCTION.
2. ALL SLOPE RATIOS ARE EXPRESSED AS UNITS OF VERTICAL DISPLACEMENT TO UNITS OF HORIZONTAL DISPLACEMENT (V:H).
3. IF EMBANKMENT SLOPE ABOVE HEADWALL IS FLATTER THAN 1:2, PROVIDE WINGS FOR 1:2 SLOPE.

11 CONCRETE HEADWALL
SCALE: NTS

SMITHGROUP
architecture engineering interiors planning
SMITHGROUP, INC
35 EAST WACKER
SUITE 2200
CHICAGO, IL 60601
T 312.641.0770
F 312.641.6728
www.smithgroup.com

JJR
landscape architecture planning urban design civil engineering environmental science
JJR, LLC
35 EAST WACKER DRIVE
SUITE 2200
CHICAGO, ILLINOIS 60601
312.641.0510 T
312.641.0668 F
www.jjr-us.com

AEI Affiliated Engineers
Affiliated Engineers, Inc.
5802 Research Park Boulevard
Madison, Wisconsin 53719
Tel 608.238.2616 Fax 608.238.2614

Thornton Tomasetti
Thornton Tomasetti, Inc.
330 N. Wabash Avenue, Suite 1500
Chicago IL 60611-7622
T 312.596.2000 F 312.596.2001

TERRA ENGINEERING LTD.
225 West Ohio Street, 4th Floor
Chicago, Illinois 60654
T:(312)467-0123 F:(312) 467-0220

SEALS AND SIGNATURES

JAMIL BOU-SAAB
062-047537
REGISTERED PROFESSIONAL ENGINEER OF ILLINOIS

KEYPLAN

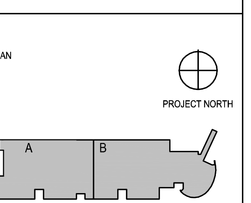

REV. NO.	DESCRIPTION	BY	APVD	DATE
0	ISSUED FOR CONSTRUCTION			07/03/12

Argonne NATIONAL LABORATORY

FMS
Facilities Management Services

PROJECT TITLE: ADVANCED PROTEIN CRYSTALLIZATION FACILITY, ARGONNE NATIONAL LABORATORY

PROJECT NO: 22378.000

DRAWING TITLE: SEWER DETAILS

DESIGNED KM	A/E CADD FILE	FACILITY NO(S)
DRAWN AC/CM	A/E DWG. NO.	
CHECKED KS	CAD NO:	
PROJECT MANAGER ANL - JESSE ADAMS DATE - 07.03.2012	DWG STATE	
	BIND ORDER	

FACILITY DOCUMENT NUMBER: J446-101-W-C5.1.0

REV. NO.

Plot Date: