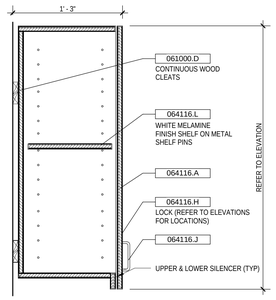

66 DETAIL AT UPPER CABINET
SCALE: 1 1/2" = 1'-0"

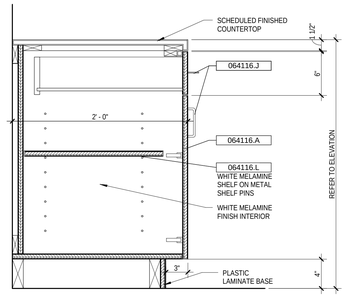

58 DETAIL AT BASE CABINET W/ DRAWER ADJ. SHELF
SCALE: 1 1/2" = 1'-0"

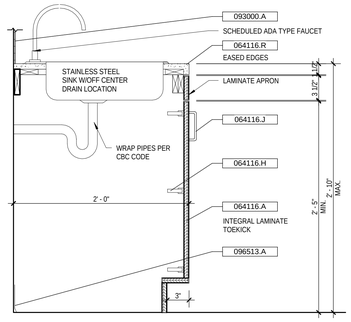

42 DETAIL AT ADA SINK BASE CABINET
SCALE: 1 1/2" = 1'-0"

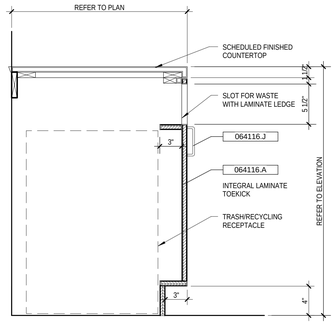

34 DETAIL AT BASE CABINET FOR RECYCLING/TRASH
SCALE: 1 1/2" = 1'-0"

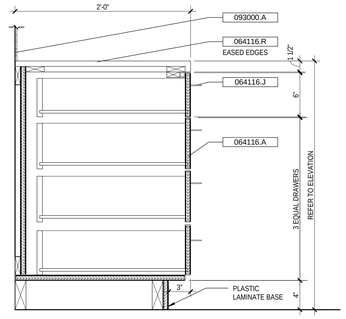

18 DETAIL AT BASE CABINET W/ DRAWERS
SCALE: 1 1/2" = 1'-0"

KEYNOTES	
Key Value	Keynote Text
055000.A	STEEL FRAMING AND SUPPORT
055000.G	MISCELLANEOUS STEEL TRIM
057000	SECTION 057000 - DECORATIVE METAL
057000.B	MISCELLANEOUS METAL FOR MILLWORK COUNTERS
061000.C	SOFTWOOD PLYWOOD BACKING PANEL
061000.D	FASTENERS AND ANCHORS
061000.K	SOLID WOOD BLOCKING
064023	SECTION 064023 - INTERIOR ARCHITECTURAL WOODWORK
064023.B	1" DIAM. SATIN CHROME ROD AND ESCUTCHEON PLATES
064113.A	WOOD-VENEER-FACED ARCHITECTURAL CABINETS
064113.F	CABINET HARDWARE
064113.H	WIRE PULL
064113.I	ADJUSTABLE SHELF STANDARDS AND SUPPORT
064116.A	PLASTIC-LAMINATE-FACED ARCHITECTURAL CABINET
064116.H	CABINET HARDWARE
064116.J	WIRE PULL
064116.L	ADJUSTABLE SHELF STANDARDS AND SUPPORT
064116.P	WOOD BLOCKING
064116.R	SOLID-SURFACING MATERIAL
064200.F	SHELF BRACKETS AND C-CHANNELS
084413	SECTION 084413 - GLAZED ALUMINUM CURTAIN WALLS
087100.G	CENTER-HUNG PIVOTS
088000	SECTION 088000 - GLAZING
088000.G	CLEAR GLASS
092216.A	NON-LOAD-BEARING STEEL FRAMING
092900.A	1/2" GYPSUM BOARD
092900.R	STEPPED OUTSIDE CORNER EXTRUSION
093000.A	CERAMIC TILE
096513.A	RESILIENT WALL BASE AND ACCESSORIES
265100	LIGHT FIXTURE

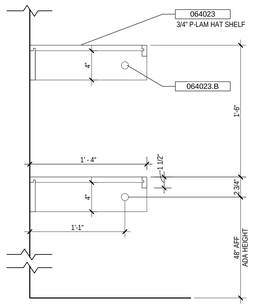

68 DETAIL COAT ROD HAT SHELF
SCALE: 1 1/2" = 1'-0"

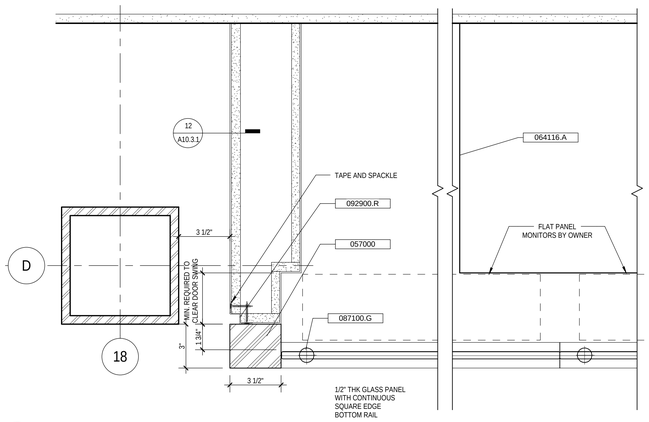

60 DETAIL AT VIDEO WALL CORNER
SCALE: 3" = 1'-0"

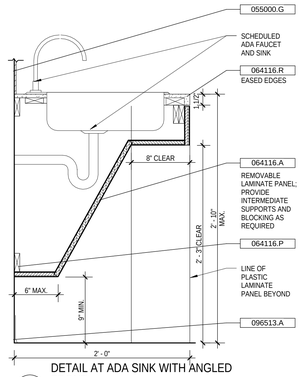

36 DETAIL AT ADA SINK WITH ANGLED FRONT
SCALE: 1 1/2" = 1'-0"

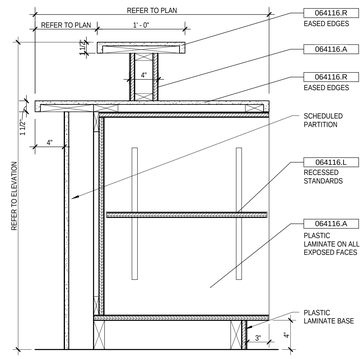

28 DETAIL AT BASE CABINET W/ TRANSACTION TOP
SCALE: 1 1/2" = 1'-0"

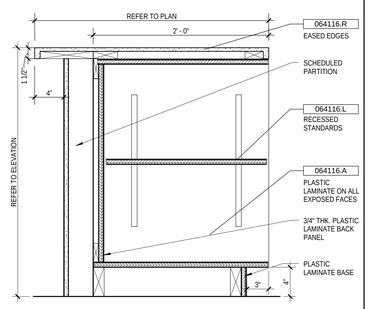

12 DETAIL AT BASE CABINET W/ ADJ SHELF ON BRACKETS
SCALE: 1 1/2" = 1'-0"

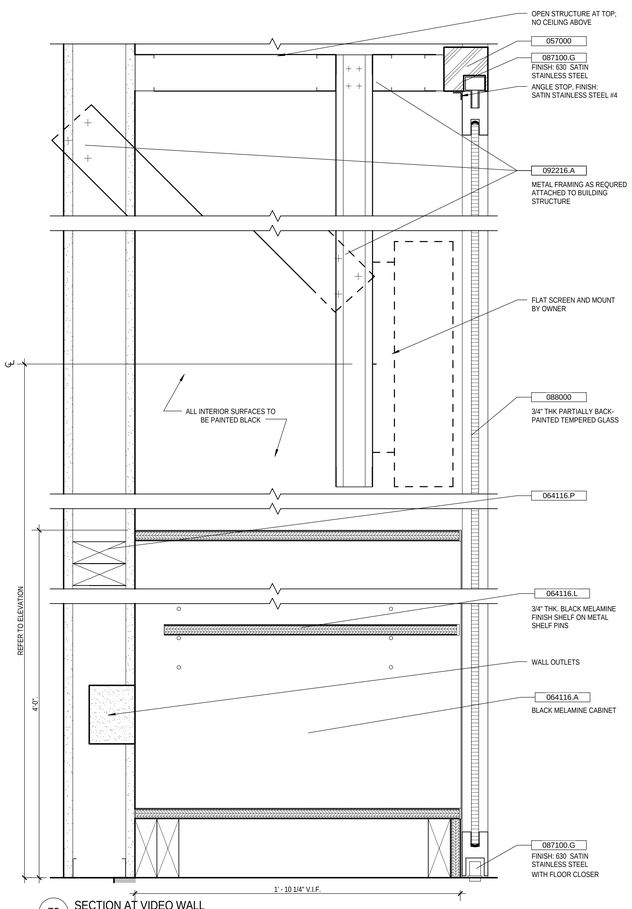

72 SECTION AT VIDEO WALL
SCALE: 3" = 1'-0"

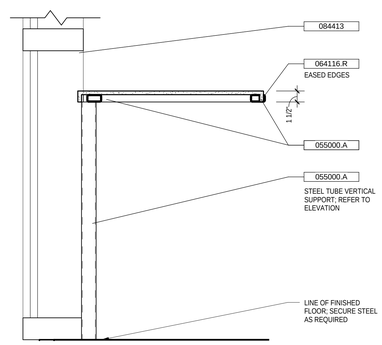

54 DETAIL AT BREAKROOM EATING COUNTER
SCALE: 1 1/2" = 1'-0"

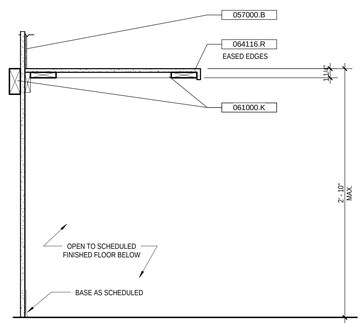

38 DETAIL AT COUNTERTOP OPEN BELOW
SCALE: 1 1/2" = 1'-0"

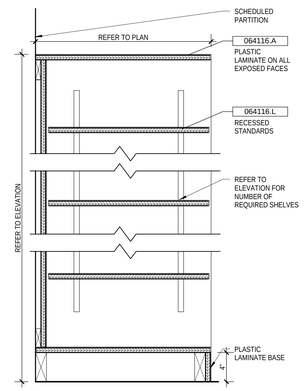

22 DETAIL AT CABINET W/ ADJ SHELVES ON BRACKETS
SCALE: 1 1/2" = 1'-0"

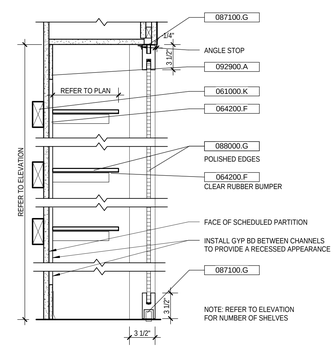

14 SECTION AT DISPLAY CASE
SCALE: 1 1/2" = 1'-0"

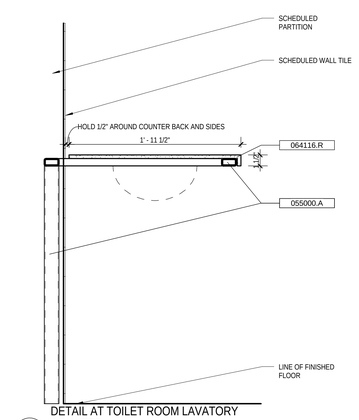

56 DETAIL AT TOILET ROOM LAVATORY COUNTER
SCALE: 1 1/2" = 1'-0"

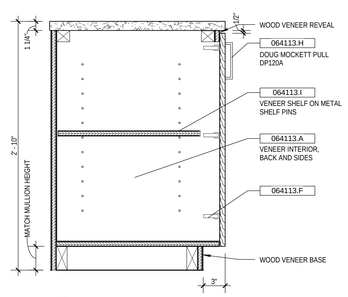

40 DETAIL AT CREDENZA
SCALE: 1 1/2" = 1'-0"

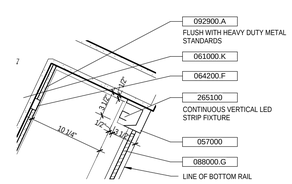

24 DETAIL AT DISPLAY CABINET
SCALE: 1 1/2" = 1'-0"

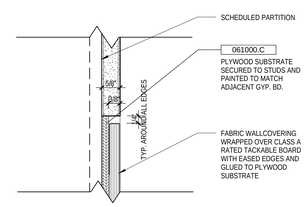

16 DETAIL AT RECESSED WRAPPED PANEL
SCALE: 6" = 1'-0"

SMITHGROUP
architecture engineering interiors planning
SMITHGROUP, INC
35 EAST WACKER
SUITE 2200
CHICAGO, IL 60601
T 312.641.0770
F 312.641.6728
www.smithgroup.com

JJR
landscape architecture planning urban design civil engineering environmental science
JJR, LLC
35 EAST WACKER DRIVE
SUITE 2200
CHICAGO, ILLINOIS 60601
312.641.0510 T
312.641.0668 F
www.jjr-us.com

AEI Affiliated Engineers
Affiliated Engineers, Inc.
5802 Research Park Boulevard
Madison, Wisconsin 53719
Tel 608.238.2616 Fax 608.238.2614

Thornton Tomasetti
Thornton Tomasetti, Inc.
330 N. Wabash Avenue, Suite 1500
Chicago IL 60611-7622
T 312.596.2000 F 312.596.2001

TERRA ENGINEERING LTD.
225 West Ohio Street, 4th Floor
Chicago, Illinois 60654
T:(312)467-0123 F:(312) 467-0220

SEALS AND SIGNATURES

LICENSED ARCHITECT J. NOEL BRYAN 001-019891 STATE OF ILLINOIS

REV. NO.	DESCRIPTION	BY	APVD	DATE
	ISSUED FOR CONSTRUCTION			07/03/12

Argonne NATIONAL LABORATORY

FMS
Facilities Management Services

PROJECT TITLE: ADVANCED PROTEIN CRYSTALLIZATION FACILITY, ARGONNE NATIONAL LABORATORY
PROJECT NO: 22378.000
DRAWING TITLE:

INTERIOR MILLWORK DETAILS

DESIGNED: Designer	A/E CADD FILE: A10.3.2	FACILITY NO(S)
DRAWN: Author	A/E DWG. NO.: A10.3.2	
CHECKED: Checker	CAD NO.:	
PROJECT MANAGER: ANL - JESSE ADAMS	DWG STATE	
DATE - 11/06/11	BIND ORDER	

FACILITY DOCUMENT NUMBER: J446-101-W- A10.3.2
REV. NO.

Plot Date: 7/3/2012 4:59:51 PM