KEYNOTES	
Key Value	Keynote Text
051000.A	STRUCTURAL STEEL FRAMING
084413.A	GLAZED ALUMINUM CURTAIN WALL FRAMING
084413.H	ALUMINUM PANELS/TRIM BY CW MANUFACTURER

GENERAL NOTES: FOG = FACE OF GLASS

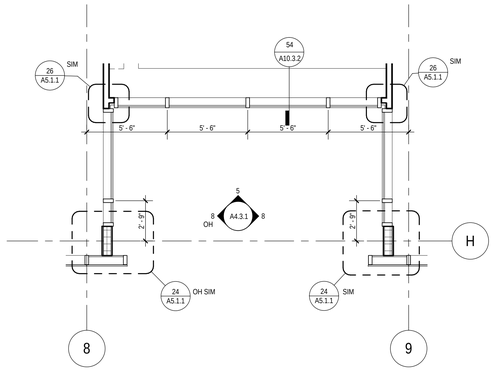

3 ENLARGED PLAN SMALL COURTYARD
SCALE: 1/4" = 1'-0"

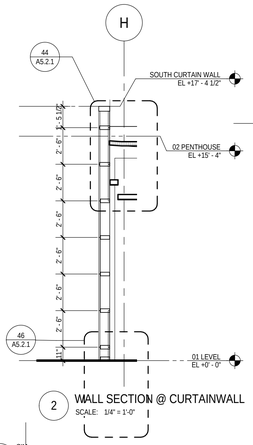

2 WALL SECTION @ CURTAINWALL
SCALE: 1/4" = 1'-0"

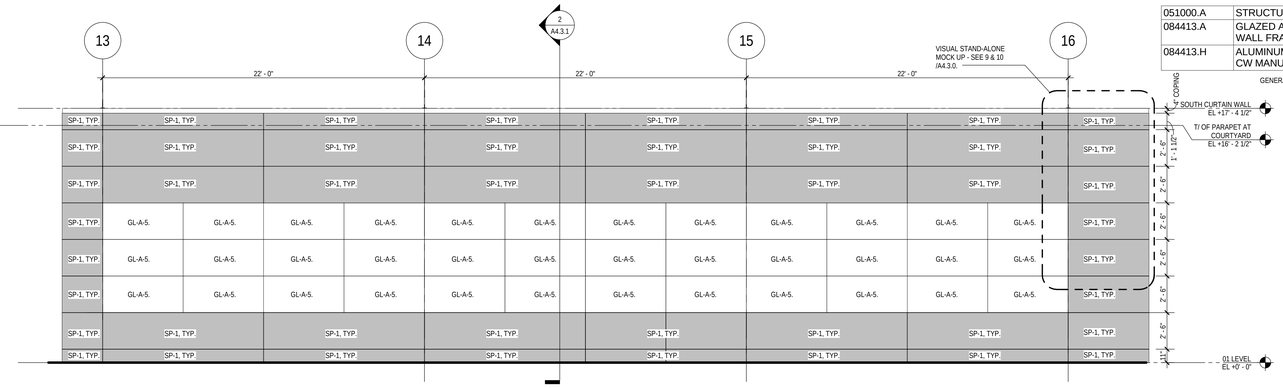

1 ENLARGED SOUTH CURTAINWALL
SCALE: 1/4" = 1'-0"

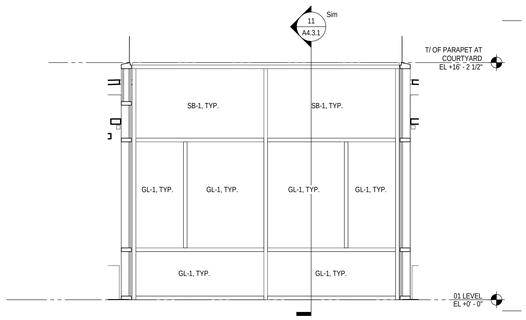

5 CENTRAL COURT SOUTH ELEVATION
SCALE: 1/4" = 1'-0"

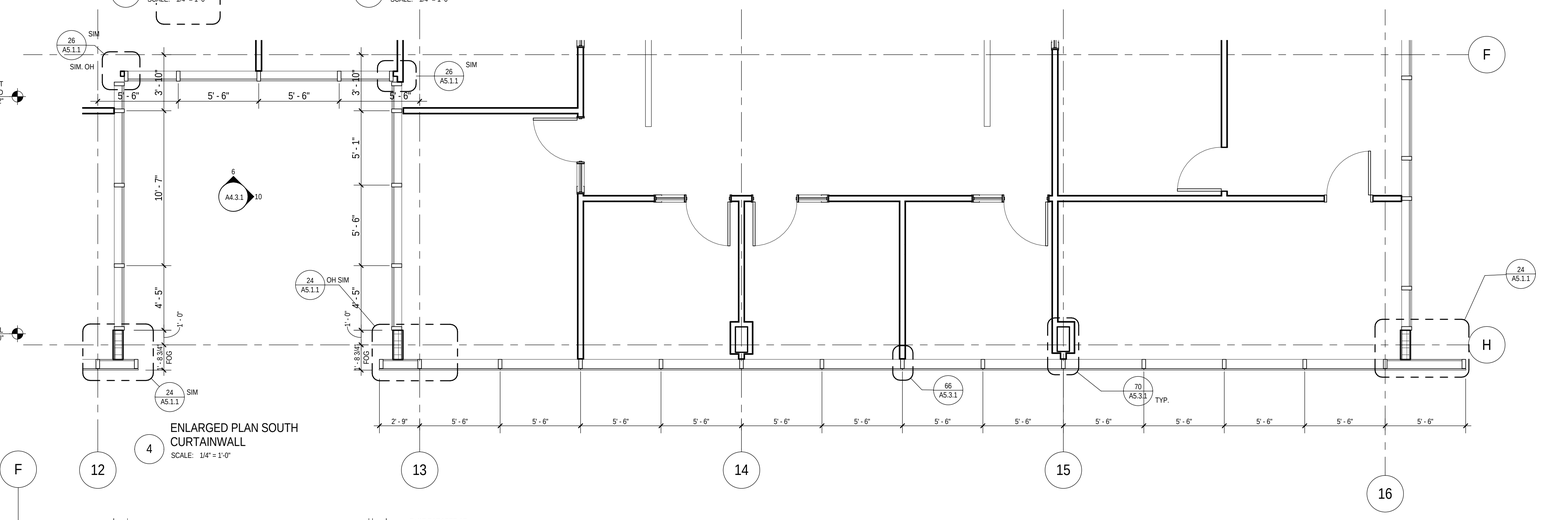

4 ENLARGED PLAN SOUTH CURTAINWALL
SCALE: 1/4" = 1'-0"

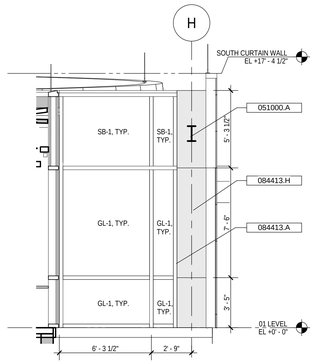

8 CENTRAL COURT EAST ELEVATION
SCALE: 1/4" = 1'-0"

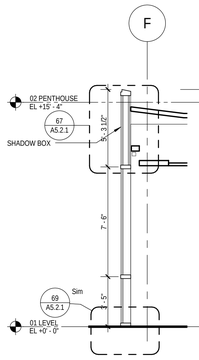

7 WALL SECTION @ SOUTH COURTYARD CURTAINWALL
SCALE: 1/4" = 1'-0"

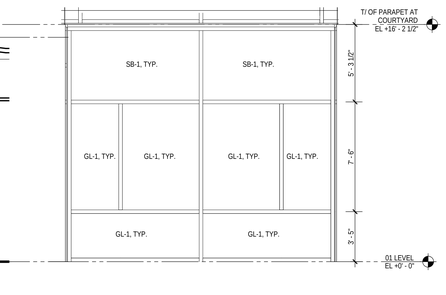

6 ENLARGED SOUTH COURTYARD CURTAINWALL
SCALE: 1/4" = 1'-0"

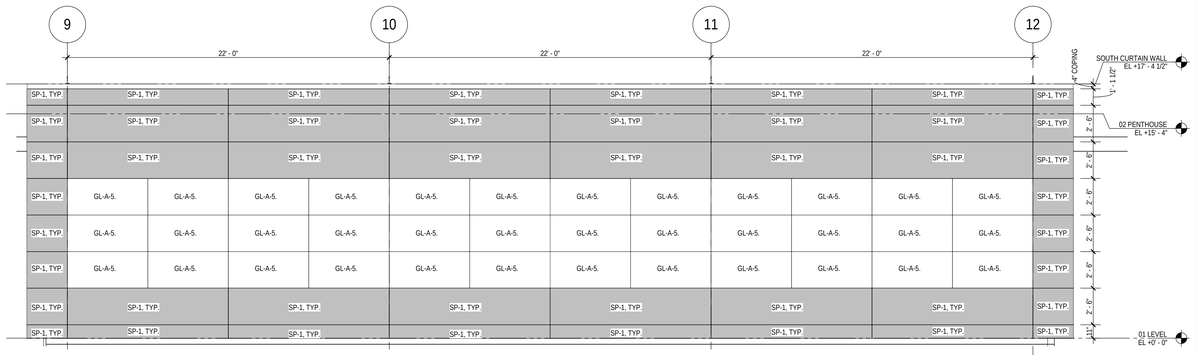

9 ENLARGED ELEVATION AT SOUTH CURTAIN WALL - CENTER BAYS
SCALE: 1/4" = 1'-0"

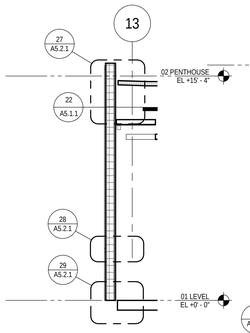

12 WALL SECTION @ SOUTH COURTYARD METAL PANEL
SCALE: 1/4" = 1'-0"

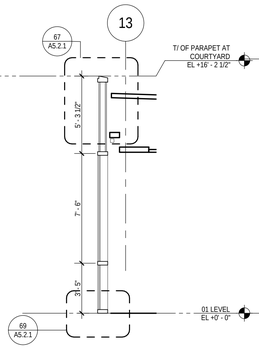

11 WALL SECTION@ SOUTH COURTYARD E-W CURTAINWALL
SCALE: 1/4" = 1'-0"

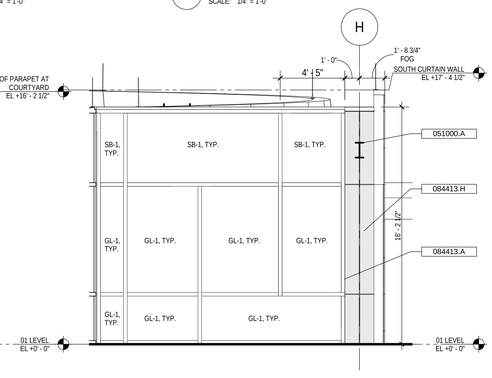

10 ENLARGED SOUTH ELEVATION AT WEST ENTRY
SCALE: 1/4" = 1'-0"

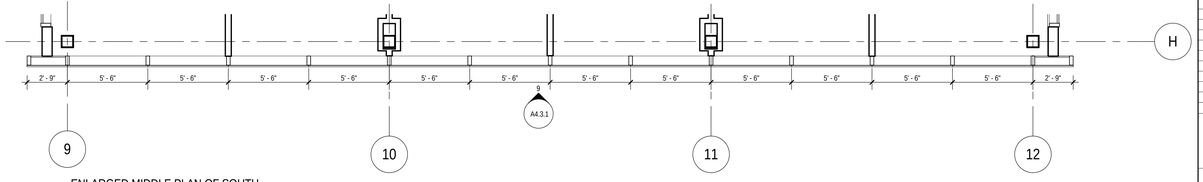

13 ENLARGED MIDDLE PLAN OF SOUTH CURTAIN WALL
SCALE: 1/4" = 1'-0"

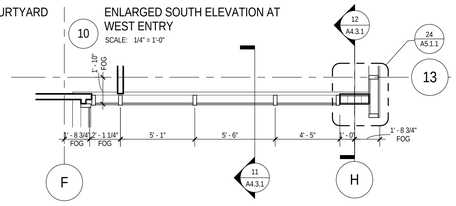

14 ENLARGED PLAN SOUTH COURTYARD E-W CURTAINWALL
SCALE: 1/4" = 1'-0"

INSULATED-GLASS TYPES
GL-1
VIRACON VUE 24 - 40 INSULATING CLEAR HS/HS VISION GLASS
GL-2
VIRACON VUE 24 - 40 INSULATING CLEAR HS/HS SILKSCREEN; VISION GLASS WITH 40% FRIT
GL-3
VIRACON VUE 24 - 40 INSULATING CLEAR HS/HS SILKSCREEN
GL-4
FIRE -RATED GLAZING; MONOLITHIC CERAMIC GLAZING FILM-FACED CERAMIC GLAZING
GL-A-5
ELECTROCHROMIC, CLEAR INSULATING GLASS (SAGE GLASS)
SB-1
VIRACON VUE 24 VISION GLASS WITH SHADOW BOX
SP-1
METAL SPANDREL PANEL

SMITHGROUP
architecture engineering interiors planning
SMITHGROUP, INC
35 EAST WACKER
SUITE 2200
CHICAGO, IL 60601
T 312.641.0770
F 312.641.6728
www.smithgroup.com

JJR
landscape architecture planning urban design civil engineering environmental science
JJR, LLC
35 EAST WACKER DRIVE
SUITE 2200
CHICAGO, ILLINOIS 60601
312.641.0510 T
312.641.0668 F
www.jjr-us.com

AEI Affiliated Engineers
Affiliated Engineers, Inc.
5802 Research Park Boulevard
Madison, Wisconsin 53719
Tel 608.238.2616 Fax 608.238.2614

Thornton Tomasetti
Thornton Tomasetti, Inc.
330 N. Wabash Avenue, Suite 1500
Chicago IL 60611-7622
T 312.596.2000 F 312.596.2001

TERRA ENGINEERING LTD.
225 West Ohio Street, 4th Floor
Chicago, Illinois 60654
T:(312)467-0123 F:(312) 467-0220

SEALS AND SIGNATURES

LICENSED ARCHITECT V. NOEL BRYAN 001-018891 STATE OF ILLINOIS

REV. NO.	DESCRIPTION	BY	APVD	DATE
	ISSUED FOR CONSTRUCTION			07/03/12

Argonne NATIONAL LABORATORY

FMS
Facilities Management Services

PROJECT TITLE: ADVANCED PROTEIN CRYSTALLIZATION FACILITY, ARGONNE NATIONAL LABORATORY

PROJECT NO: 22378.000

DRAWING TITLE

EXTERIOR WALL ENLARGED ELEVATIONS, PLANS AND WALL SECTIONS

DESIGNED TT	A/E CADD FILE A4.3.1	FACILITY NO(S)
DRAWN AR, BJ	A/E DWG. NO. A4.3.1	
CHECKED LH	CAD NO:	
PROJECT MANAGER ANL - JESSE ADAMS DATE - 05/06/11	DWG STATE	
	BIND ORDER	
FACILITY DOCUMENT NUMBER J446-101-W-		REV. NO. A4.3.1

Plot Date: 7/3/2012 4:26:53 PM