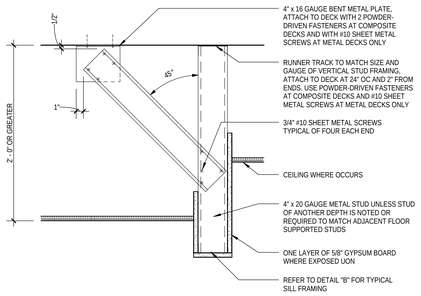

A TYPICAL KNEE BRACE REQUIREMENTS

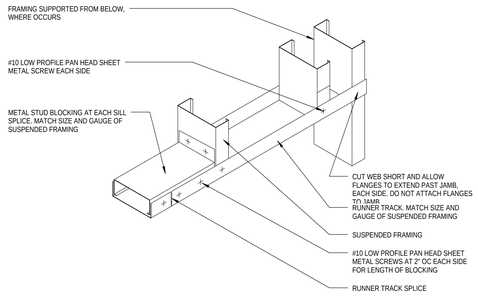

B TYPICAL SILL REQUIREMENTSG

2 SUSPENDED PARTITION - TYPICAL DETAILS
SCALE: 1 1/2" = 1'-0"

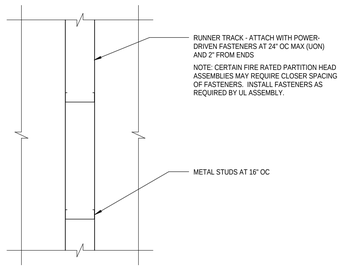

3 METAL FRAMING REFLECTED CEILING PLAN AT CONCRETE SLAB
SCALE: 1 1/2" = 1'-0"

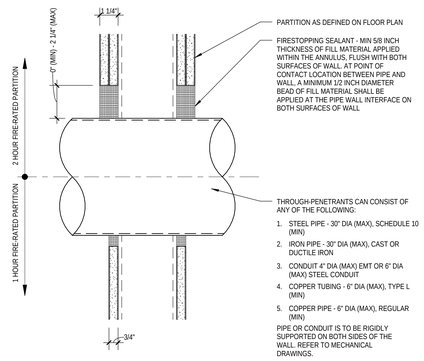

A METAL PIPES OR CONDUITS (UL DESIGN NO. W-L-1054)

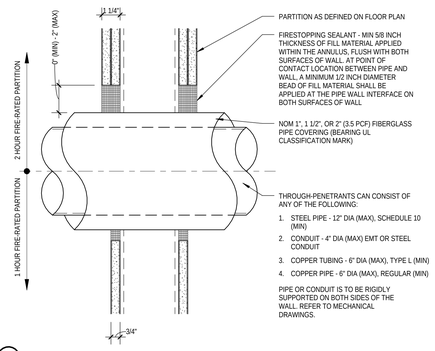

B INSULATED PIPES (UL DESIGN NO. W-L-5029)

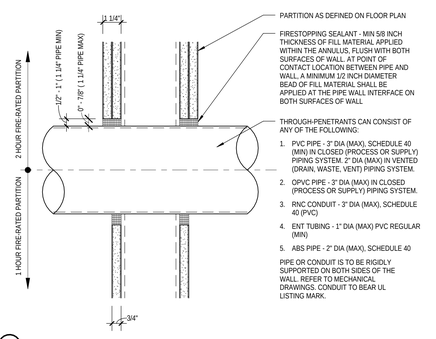

C NON-METALLIC PIPES OR CONDUIT (UL DESIGN NO. W-L-2088)

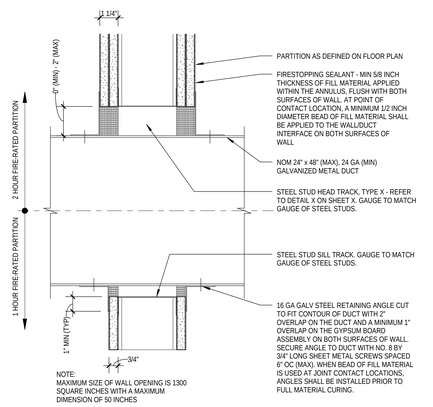

NOTE:
MAXIMUM SIZE OF WALL OPENING IS 1300 SQUARE INCHES WITH A MAXIMUM DIMENSION OF 50 INCHES

D METAL DUCT WITHOUT FIRE DAMPER (UL DESIGN NO. W-L-7040)

1 THROUGH PENETRATION FIRESTOPPING - MECHANICAL AND ELECTRICAL PENETRATIONS
SCALE: 3" = 1'-0"
TYPICAL AT ONE-HOUR AND TW0-HOUR METAL FRAMED GYPSUM BOARD PARTITIONS

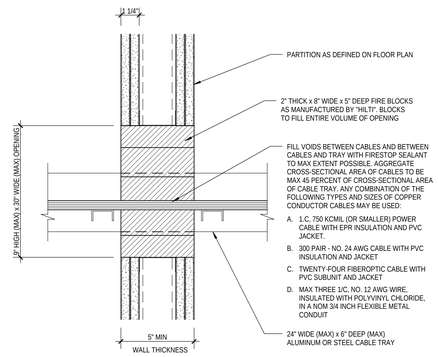

E CABLE TRAY (UL DESIGN NO. W-L-4011)

NOTE:
THIS IS BASED ON A 2-HOUR RATED ASSEMBLY. USE 1 LAYER OF 5/8" GYPSUM BOARD BOTH SIDES OF METAL STUDS FOR 1-HOUR ASSEMBLY.

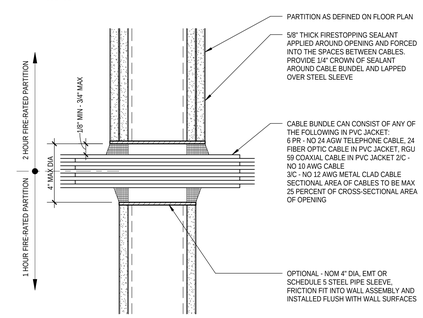

F CABLE BUNDLE IN METALLIC SLEEVE (UL DESIGN NO. W-L-3111)

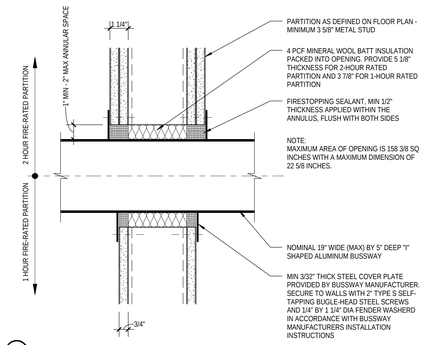

G ELECTRICAL BUSSWAY (UL DESIGN NO. W-L-6001)

SMITHGROUP
architecture engineering interiors planning
SMITHGROUP, INC
35 EAST WACKER
SUITE 2200
CHICAGO, IL 60601
T 312.641.0770
F 312.641.6728
www.smithgroup.com

JJR
landscape architecture planning urban design civil engineering environmental science
JJR, LLC
35 EAST WACKER DRIVE
SUITE 2200
CHICAGO, ILLINOIS 60601
312.641.0510 T
312.641.0668 F
www.jjr-us.com

AEI Affiliated Engineers
Affiliated Engineers, Inc.
5802 Research Park Boulevard
Madison, Wisconsin 53719
Tel 608.238.2616 Fax 608.238.2614

Thornton Tomasetti
Thornton Tomasetti, Inc.
330 N. Wabash Avenue, Suite 1500
Chicago IL 60611-7622
T 312.596.2000 F 312.596.2001

TERRA ENGINEERING LTD.
225 West Ohio Street, 4th Floor
Chicago, Illinois 60654
T:(312)467-0123 F:(312) 467-0220

SEALS AND SIGNATURES

LICENSED ARCHITECT V. NOEL BHYAN 001-019897 STATE OF ILLINOIS

REV. NO.	DESCRIPTION	BY	APVD	DATE
	ISSUED FOR CONSTRUCTION			07/03/12

Argonne NATIONAL LABORATORY

FMS
Facilities Management Services

PROJECT TITLE: ADVANCED PROTEIN CRYSTALLIZATION FACILITY, ARGONNE NATIONAL LABORATORY

PROJECT NO: 22378.000

DRAWING TITLE

PARTITION DETAILS

DESIGNED: Designer	A/E CADD FILE: A9.2.3	FACILITY NO(S)
DRAWN: Author	A/E DWG. NO.: A9.2.3	
CHECKED: Checker	CAD NO.:	
PROJECT MANAGER: ANL - JESSE ADAMS, DATE - 09/08/08	DWG STATE	
	BIND ORDER	
FACILITY DOCUMENT NUMBER: J446-101-W-		REV. NO.: A9.2.3

Plot Date: 7/3/2012 4:56:17 PM