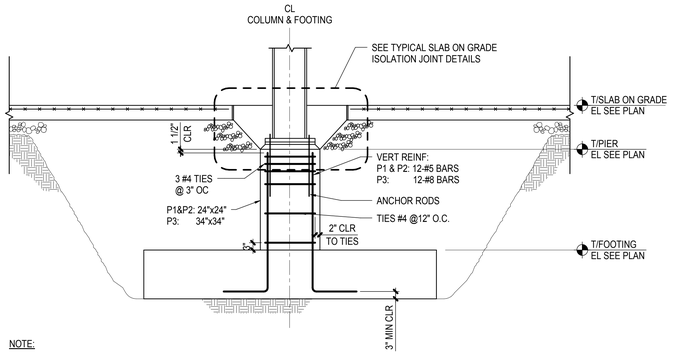

NOTE:

1. SEE TYPICAL ISOLATED FOOTING - BASE PLATE WITHIN CONCRETE INFILL DETAIL FOR ADDITIONAL INFORMATION.

1 TYPICAL PIER ON ISOLATED FOOTING

NOT TO SCALE

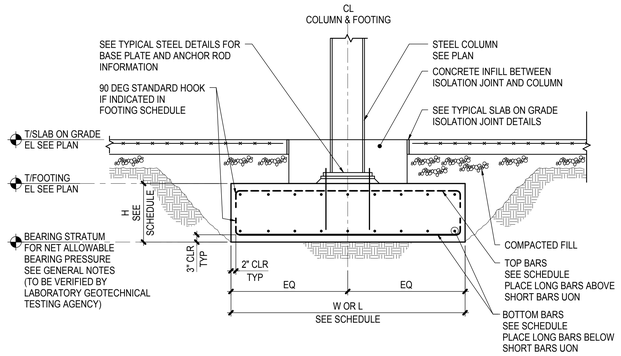

2 TYPICAL ISOLATED FOOTING (NO PIER) - BASE PLATE WITHIN CONCRETE INFILL

NOT TO SCALE

ISOLATED FOOTING SCHEDULE — f'c = SEE GENERAL NOTES

MARK	SIZE			REINFORCEMENT		REMARKS
	L	W	H	BOTTOM BARS	TOP BARS	
F1	3'-0"	3'-0"	1'-0"	4-#3	4-#3	EXTEND FTG DIM WHERE NOTED ON PLAN
F2	3'-6"	3'-6"	1'-6"	4-#4	4-#4	
F3	5'-0"	5'-0"	1'-6"	5-#4	5-#4	
F4	6'-0"	6'-0"	1'-6"	6-#5	6-#4	
F5	7'-3"	7'-3"	3'-0"	8-#6	8-#5	
F6	8'-0"	8'-0"	3'-6"	10-#5	10-#6	

NOTE:

1. REINFORCEMENT SHALL NOT BE SPLICED WITHOUT WRITTEN AUTHORIZATION OF SER.

3 ISOLATED FOOTING SCHEDULE

NOT TO SCALE

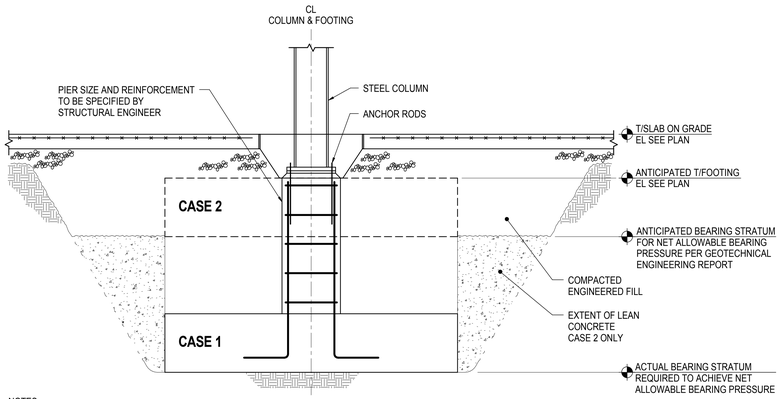

NOTES:

1. PRIOR TO USING THIS DETAIL OBTAIN WRITTEN APPROVAL FROM STRUCTURAL ENGINEER
2. THESE FOOTING INSTALLATION PROCEDURES ARE TO BE FOLLOWED IN THE EVENT THAT ANTICIPATED NET ALLOWABLE BEARING PRESSURE CANNOT BE OBTAINED AT THE ANTICIPATED STRATUM

CASE 1: PLACE FOOTING AT ACTUAL BEARING STRATUM. INSTALL PIER TO ANTICIPATED TOP OF FOOTING ELEVATION

CASE 2: AT CONTRACTOR'S OPTION, POUR LEAN CONCRETE (F'c=2000 PSI) TO THE ANTICIPATED BOTTOM OF FOOTING ELEVATION AND CAST FOOTING ON TOP OF LEAN CONCRETE

3. SEE TYPICAL ISOLATED FOOTING DETAILS FOR ADDITIONAL INFORMATION

TYPICAL FOOTING DETAIL WHERE OVER-EXCAVATION IS REQUIRED DUE TO UNANTICIPATED SOIL CONDITIONS - STEEL COLUMN

4 NOT TO SCALE

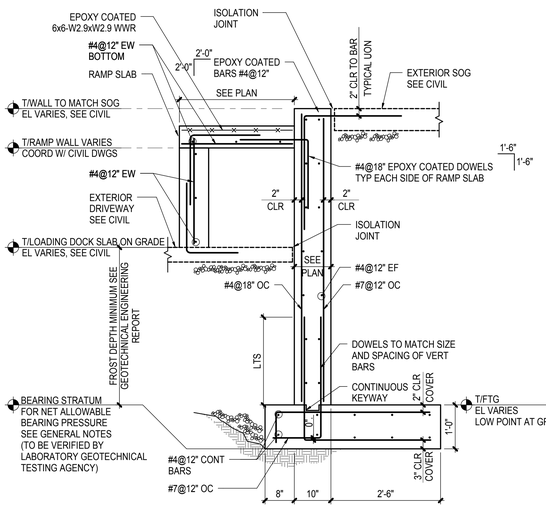

5 LOADING DOCK AT SLAB ON GRADE

3/4" = 1'-0"

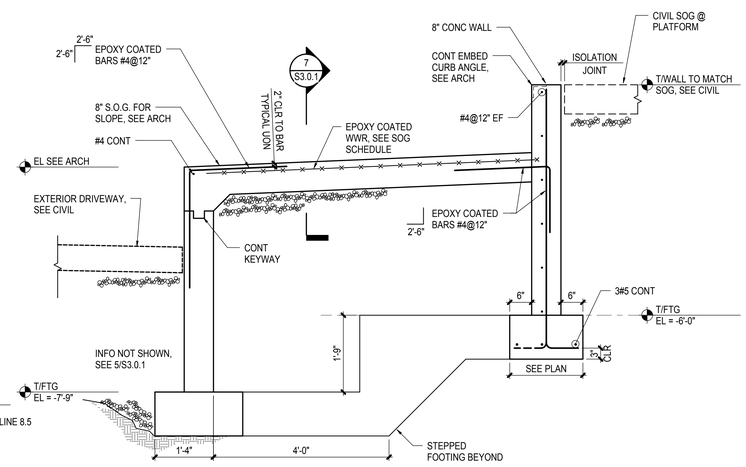

6 SECTION AT LOADING DOCK LEVELER

3/4" = 1'-0"

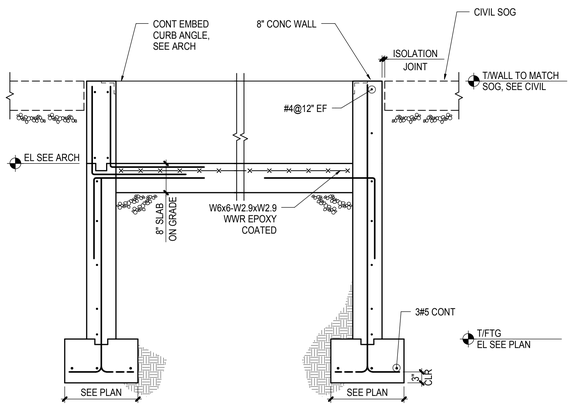

FOR INFO NOT SHOWN, SEE 6/S3.0.1

7 CROSS SECTION AT LOADING DOCK LEVELER

3/4" = 1'-0"

SMITHGROUP
architecture engineering interiors planning
SMITHGROUP, INC
35 EAST WACKER
SUITE 2200
CHICAGO, IL 60601
T 312.641.0770
F 312.641.6728
www.smithgroup.com

JJR
landscape architecture planning urban design civil engineering environmental science
JJR, LLC
35 EAST WACKER DRIVE
SUITE 2200
CHICAGO, ILLINOIS 60601
312.641.0510 T
312.641.0668 F
www.jjr-us.com

Affiliated Engineers
Affiliated Engineers, Inc.
5802 Research Park Boulevard
Madison, Wisconsin 53719
Tel 608.238.2616 Fax 608.238.2614

Thornton Tomasetti
Thornton Tomasetti, Inc.
330 N. Wabash Avenue, Suite 1500
Chicago IL 60611-7622
T 312.596.2000 F 312.596.2001

TERRA ENGINEERING LTD.
225 West Ohio Street, 4th Floor
Chicago, Illinois 60654
T:(312)467-0123 F:(312) 467-0220

SEALS AND SIGNATURES

STATE OF ILLINOIS
CAROL A. POST
081-004887
CHICAGO, ILLINOIS
LICENSED STRUCTURAL ENGINEER

PROJECT NORTH

REV. NO.	DESCRIPTION	BY	APVD	DATE
	ISSUED FOR CONSTRUCTION			07/03/12

Argonne NATIONAL LABORATORY

FMS
Facilities Management Services

PROJECT TITLE: ADVANCED PROTEIN CRYSTALLIZATION FACILITY, ARGONNE NATIONAL LABORATORY

PROJECT NO: C10539.00

DRAWING TITLE: TYPICAL FOOTING DETAILS

DESIGNED Designer	A/E CADD FILE S3.0.1	FACILITY NO(S)
DRAWN Author	A/E DWG. NO. S3.0.1	
CHECKED Checker	CAD NO:	
PROJECT MANAGER ANL - JESSE ADAMS DATE - 08/31/11	DWG STATE	
	BIND ORDER	
FACILITY DOCUMENT NUMBER J446-101-W-	S3.0.1	REV. NO.

Plot Date: 6/27/2012 5:18:06 PM