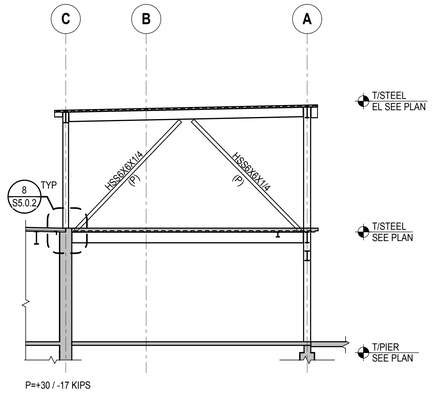

1 BRACE SECTION AT GRID LINE 8
1/8" = 1'-0"

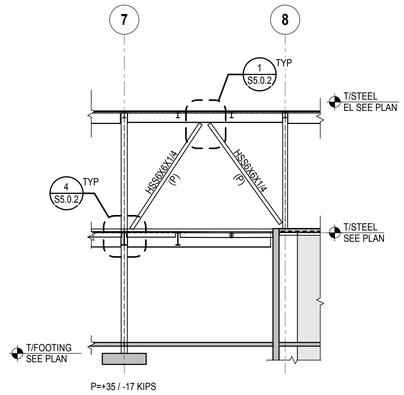

2 BRACE SECTION AT GRID LINE C
1/8" = 1'-0"

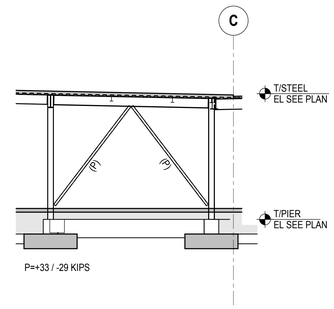

3 BRACE SECTION AT GRID LINE 1.4
1/8" = 1'-0"

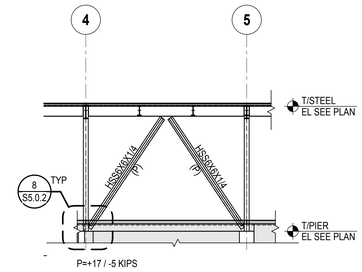

4 BRACE SECTION AT GRID LINE A
1/8" = 1'-0"

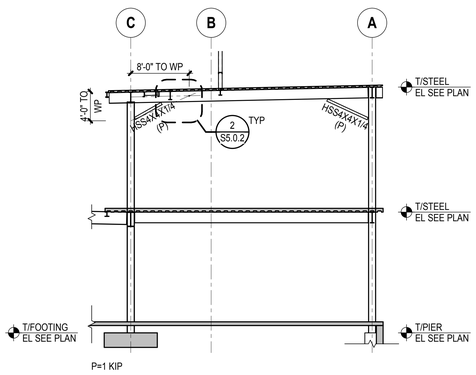

5 BRACE SECTION AT GRID LINE 11
1/8" = 1'-0"

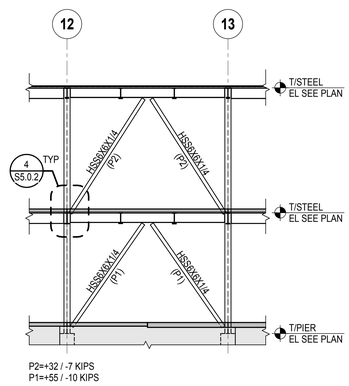

6 BRACE SECTION AT GRID LINE A
1/8" = 1'-0"

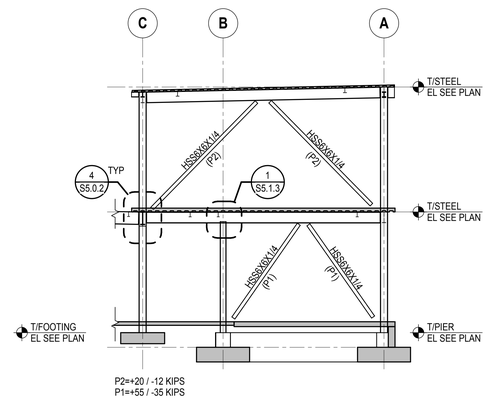

7 BRACE SECTION AT GRID LINE 14
1/8" = 1'-0"

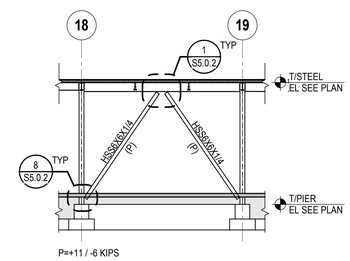

8 BRACE SECTION SOUTH OF GRID LINE B
1/8" = 1'-0"

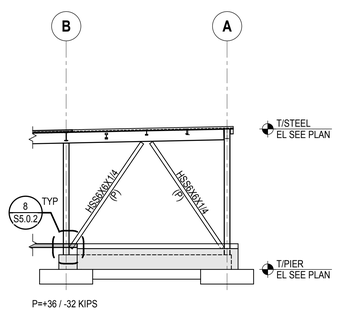

9 BRACE SECTION AT GRID LINE 17
1/8" = 1'-0"

SMITHGROUP
architecture engineering interiors planning

SMITHGROUP, INC
35 EAST WACKER
SUITE 2200
CHICAGO, IL 60601
T 312.641.0770
F 312.641.6728
www.smithgroup.com

JJR
landscape architecture
planning
urban design
civil engineering
environmental science

JJR, LLC
35 EAST WACKER DRIVE
SUITE 2200
CHICAGO, ILLINOIS 60601
312.641.0510 T
312.641.0668 F
www.jjr-us.com

Affiliated Engineers
Affiliated Engineers, Inc.
5802 Research Park Boulevard
Madison, Wisconsin 53719
Tel 608.238.2616 Fax 608.238.2614

Thornton Tomasetti
Thornton Tomasetti, Inc.
330 N. Wabash Avenue, Suite 1500
Chicago IL 60611-7622
T 312.596.2000 F 312.596.2001

TERRA
ENGINEERING LTD.
225 West Ohio Street, 4th Floor
Chicago, Illinois 60654
T:(312)467-0123 F:(312) 467-0220

SEALS AND SIGNATURES

STATE OF ILLINOIS
CAROL A. POST
081-004887
CHICAGO, ILLINOIS
LICENSED STRUCTURAL ENGINEER

PROJECT NORTH

REV. NO.	DESCRIPTION	BY	APVD	DATE
	ISSUED FOR CONSTRUCTION			07/03/12

Argonne NATIONAL LABORATORY

FMS
Facilities Management Services

PROJECT TITLE: ADVANCED PROTEIN CRYSTALLIZATION FACILITY, ARGONNE NATIONAL LABORATORY

PROJECT NO: C10539.00

DRAWING TITLE

BRACED FRAME ELEVATIONS

DESIGNED: Designer	A/E CADD FILE: S5.0.1	FACILITY NO(S)
DRAWN: Author	A/E DWG. NO.: S5.0.1	
CHECKED: Checker	CAD NO:	
PROJECT MANAGER: ANL - JESSE ADAMS, DATE - 08/31/11	DWG STATE	
	BIND ORDER	
FACILITY DOCUMENT NUMBER: J446-101-W-	S5.0.1	REV. NO.

Plot Date: 6/27/2012 5:18:39 PM