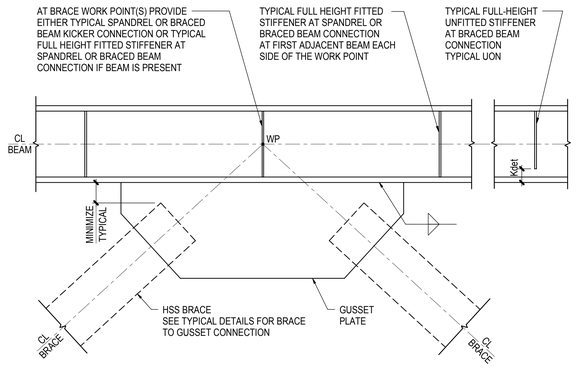

NOTE:

1. BRACE WORK POINTS ARE ECCENTRIC AT SIMILAR CONDITION

1 TYPICAL CONCENTRIC BRACE CONNECTION TO BEAM
3/4" = 1'-0"

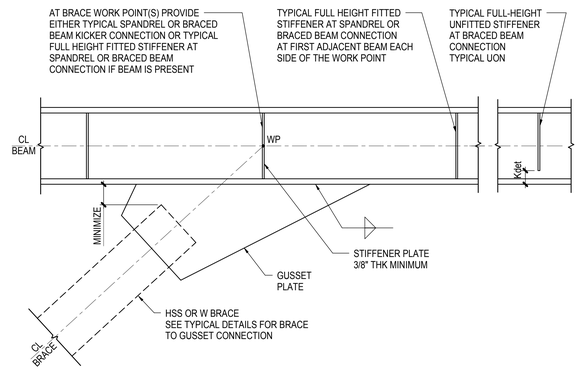

2 TYPICAL KNEE BRACE CONNECTION TO BEAM
3/4" = 1'-0"

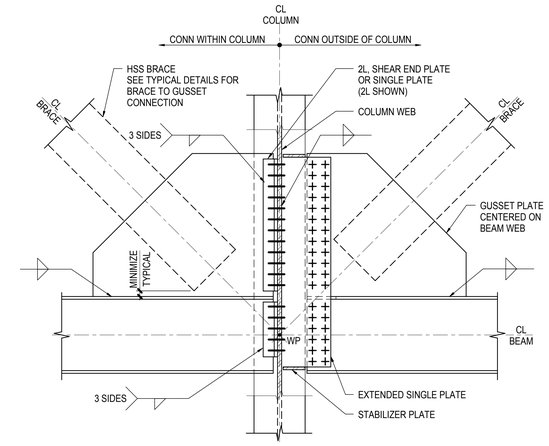

3 TYPICAL BRACE CONNECTION TO COLUMN WEB AND BEAM
3/4" = 1'-0"

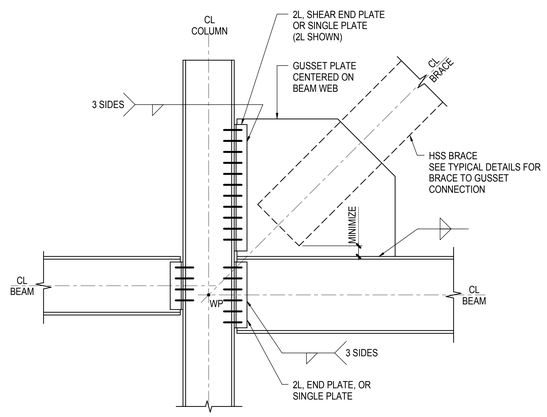

4 TYPICAL BRACE CONNECTION TO COLUMN FLANGE AND BEAM
3/4" = 1'-0"

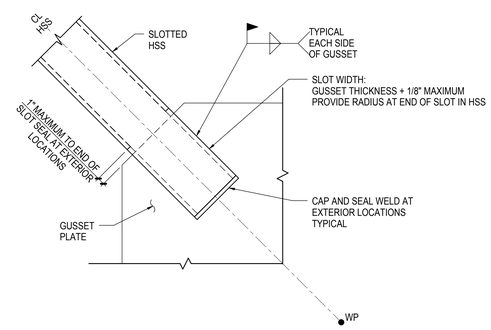

NOTE:

1. ERECTION BOLTS (IF REQUIRED) NOT SHOWN

5 TYPICAL SLOTTED HSS BRACE TO GUSSET CONNECTION - WELDED
1 1/2" = 1'-0"

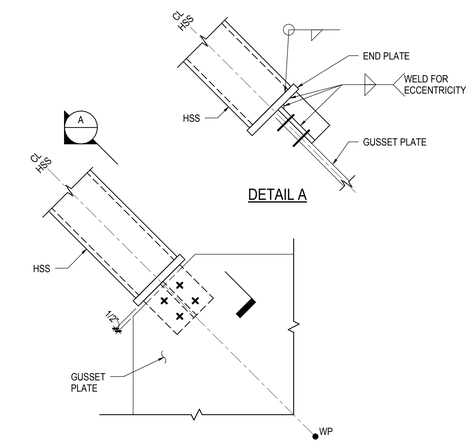

6 TYPICAL ONE SIDED HSS BRACE TO GUSSET CONNECTION
1 1/2" = 1'-0"

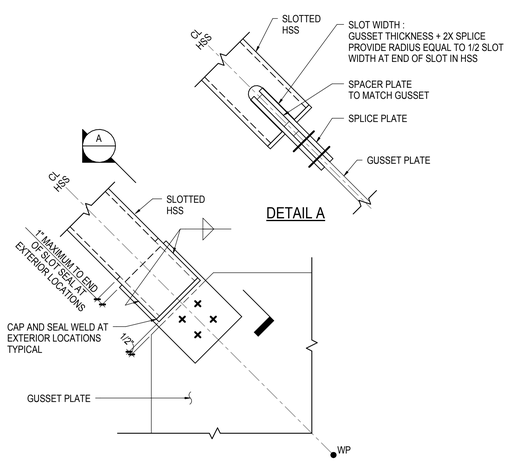

TYPICAL SLOTTED HSS BRACE TO GUSSET CONNECTION WITH SPLICE PLATES
7 NOT TO SCALE

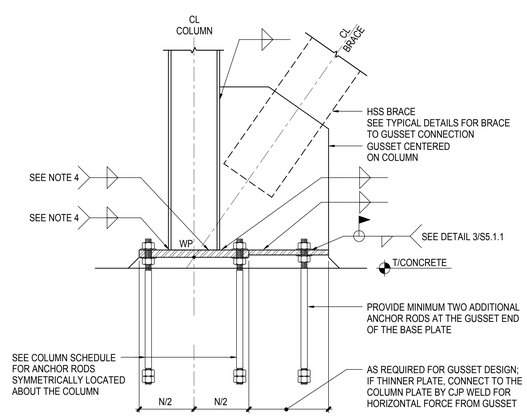

NOTES:

1. SEE 2/S5.1.1 FOR BASE PLATE SIZE AND ANCHOR ROD MARK
2. SEE BRACED FRAME ELEVATIONS AND BASE PLATE SCHEDULE
3. SEE TYPICAL BASE PLATE DETAILS FOR WELD SIZES

8 TYPICAL BRACE TO BASE PLATE CONNECTION
3/4" = 1'-0"

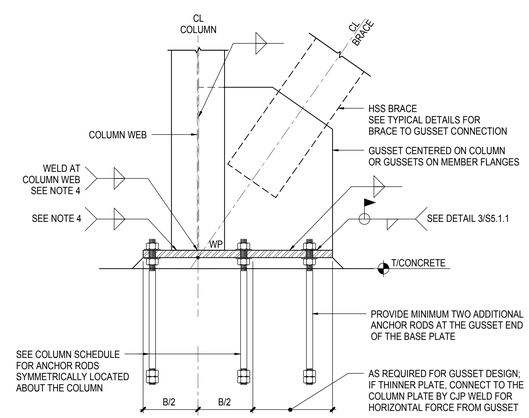

SMITHGROUP
architecture engineering interiors planning
SMITHGROUP, INC
35 EAST WACKER
SUITE 2200
CHICAGO, IL 60601
T 312.641.0770
F 312.641.6728
www.smithgroup.com

JJR
landscape architecture planning urban design civil engineering environmental science
JJR, LLC
35 EAST WACKER DRIVE
SUITE 2200
CHICAGO, ILLINOIS 60601
312.641.0510 T
312.641.0668 F
www.jjr-us.com

AEI Affiliated Engineers
Affiliated Engineers, Inc.
5802 Research Park Boulevard
Madison, Wisconsin 53719
Tel 608.238.2616 Fax 608.238.2614

Thornton Tomasetti
Thornton Tomasetti, Inc.
330 N. Wabash Avenue, Suite 1500
Chicago IL 60611-7622
T 312.596.2000 F 312.596.2001

TERRA ENGINEERING LTD.
225 West Ohio Street, 4th Floor
Chicago, Illinois 60654
T:(312)467-0123 F:(312) 467-0220

SEALS AND SIGNATURES

STATE OF ILLINOIS
CAROL A. POST
081-004887
CHICAGO, ILLINOIS
LICENSED STRUCTURAL ENGINEER

PROJECT NORTH

REV. NO.	DESCRIPTION	BY	APVD	DATE
	ISSUED FOR CONSTRUCTION			07/03/12

Argonne NATIONAL LABORATORY

FMS
Facilities Management Services

PROJECT TITLE: ADVANCED PROTEIN CRYSTALLIZATION FACILITY, ARGONNE NATIONAL LABORATORY

PROJECT NO: C10539.00

DRAWING TITLE

TYPICAL BRACED FRAME CONNECTION DETAILS

DESIGNED: Designer	A/E CADD FILE: S5.0.2	FACILITY NO(S)
DRAWN: Author	A/E DWG. NO.: S5.0.2	
CHECKED: Checker	CAD NO:	
PROJECT MANAGER: ANL - JESSE ADAMS	DWG STATE	
DATE - 06/31/11	BIND ORDER	
FACILITY DOCUMENT NUMBER: J446-101-W-		REV. NO.: S5.0.2

Plot Date: 6/27/2012 5:18:42 PM