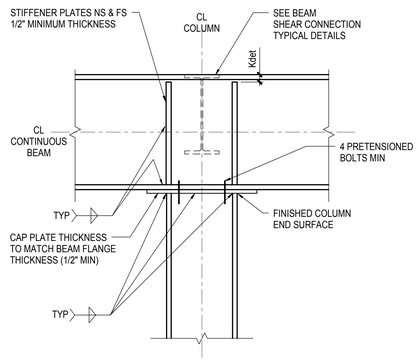

A COLUMN WEB PARALLEL TO BEAM WEB

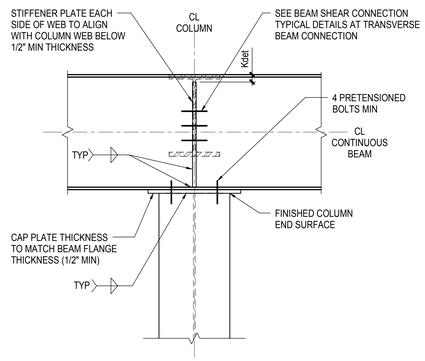

B COLUMN WEB PERPENDICULAR TO BEAM WEB

1 TYPICAL BEAM BEARING ON COLUMN (AXIAL ONLY)

NOT TO SCALE

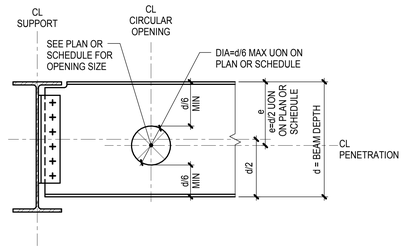

A CIRCULAR PENETRATION

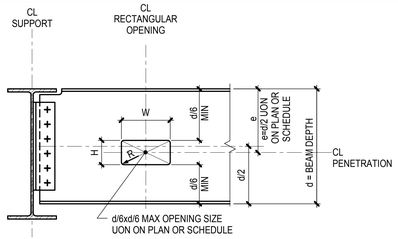

B RECTANGULAR PENETRATION

NOTES:
1. PROVIDE REINFORCEMENT AS NOTED FOR OPENING TYPE. SEE FRAMING PLANS FOR OPENING TYPE
2. SEE STRUCTURAL DRAWINGS FOR PENETRATIONS. CONTRACTOR SHALL VERIFY QUANTITY, SIZE, AND LOCATION OF ALL PENETRATIONS WITH MEP DRAWINGS
3. ALL BEAM PENETRATIONS SHALL BE SHOWN ON THE SHOP DRAWINGS FOR REVIEW BY THE ARCHITECT/ENGINEER. NO PENETRATIONS SHALL BE MADE WITHOUT PRIOR REVIEW BY THE ARCHITECT AND WRITTEN APPROVAL FROM THE STRUCTURAL ENGINEER
4. R(MIN) = 2 x WEB THICKNESS OR 5/8", WHICHEVER IS GREATER

BEAM WEB PENETRATION SCHEDULE

MARK	TYPE	MAXIMUM SIZE (IN)				PLATES (t x WIDTH (IN))				REMARKS	PLATE REINFORCEMENT GRADE TO MATCH GRADE OF BEAM
		W	H	DIAMETER	e	TOP NS & FS	BOTTOM NS & FS	SIDE NS & FS	WELD A		
A	U	12	6	-	d/2	-	-	-	-		
		-	-			-	-	-	-		
		-	-			-	-	-	-		

NOTES:
1. TYPE REFERS TO TYPICAL BEAM WEB PENETRATION DETAILS
2. THE MINIMUM CLEAR SPACE BETWEEN TWO ADJACENT PENETRATIONS SHALL BE GREATER OF THE LARGEST PENETRATION DIMENSION OR TWO TIMES THE BEAM DEPTH UON
3. SEE STRUCTURAL DRAWINGS FOR QUANTITY AND LOCATIONS OF PENETRATIONS ALL BEAM PENETRATIONS SHALL BE SHOWN ON THE SHOP DRAWINGS FOR REVIEW BY THE ARCHITECT/ENGINEER. NO PENETRATIONS SHALL BE MADE WITHOUT PRIOR REVIEW OF THE ARCHITECT/ENGINEER

2 BEAM WEB PENETRATION TYPE U (UNREINFORCED)

NOT TO SCALE

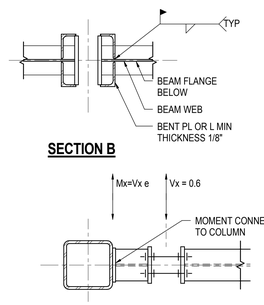

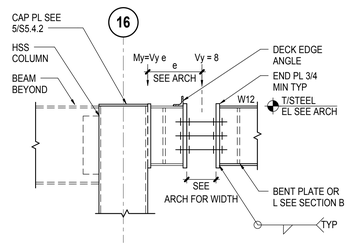

3A THERMAL BREAK DETAIL AT ENTRY CANOPY

1" = 1'-0"

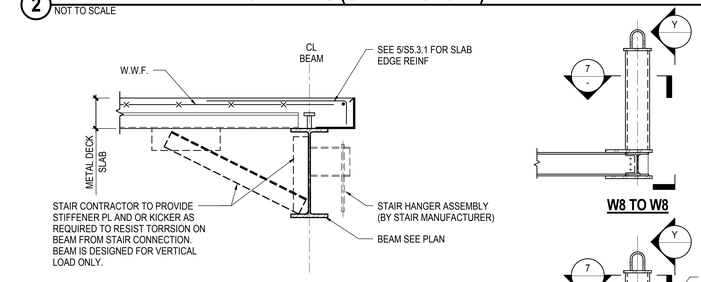

4 TYPICAL STAIR HANGER DETAIL

1" = 1'-0"

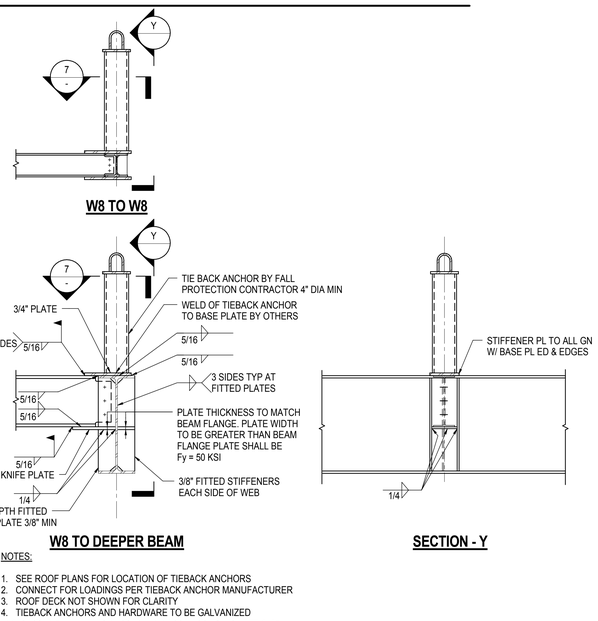

NOTES:
1. SEE ROOF PLANS FOR LOCATION OF TIEBACK ANCHORS
2. CONNECT FOR LOADINGS PER TIEBACK ANCHOR MANUFACTURER
3. ROOF DECK NOT SHOWN FOR CLARITY
4. TIEBACK ANCHORS AND HARDWARE TO BE GALVANIZED

6 TYPICAL TIEBACK ANCHOR DETAIL

3/4" = 1'-0"

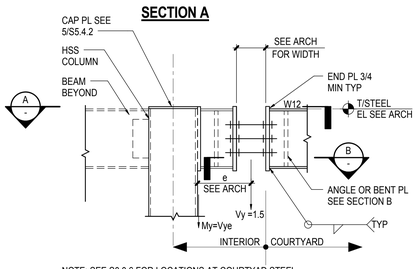

NOTE: SEE S0.0.6 FOR LOCATIONS AT COURTYAD STEEL

3 THERMAL BREAK DETAIL AT COURTYARD STEEL

NOT TO SCALE

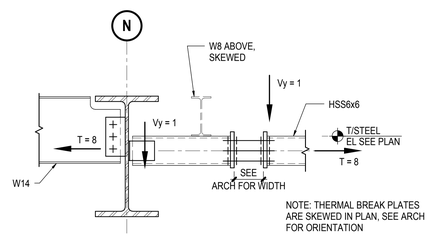

3B THERMAL BREAK DETAIL AT CONFERENCE ROOM

1" = 1'-0"

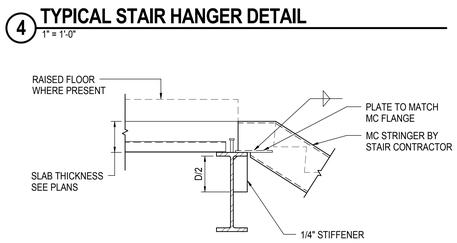

5 TYPICAL DETAIL AT METAL STAIR STRINGER

3/4" = 1'-0"

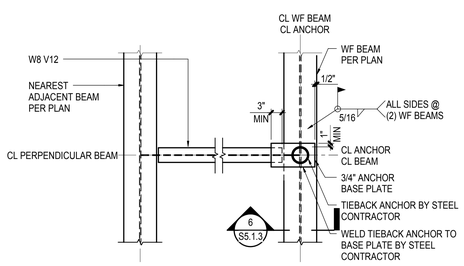

7 TIEBACK ANCHOR DETAIL ON INTERIOR BEAM

3/4" = 1'-0"

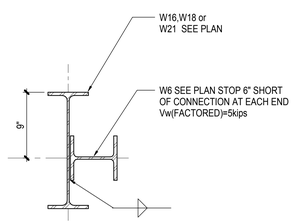

8 BUILT UP SECTION FOR CURTAIN WALL SUPPORT

1 1/2" = 1'-0"

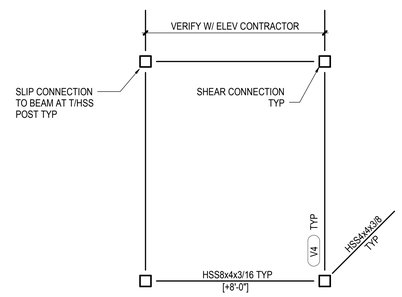

PLAN

LOADS SHOWN ARE FACTORED (KIPS)

9 ELEVATOR RAIL SUPPORT FRAME

3/4" = 1'-0"

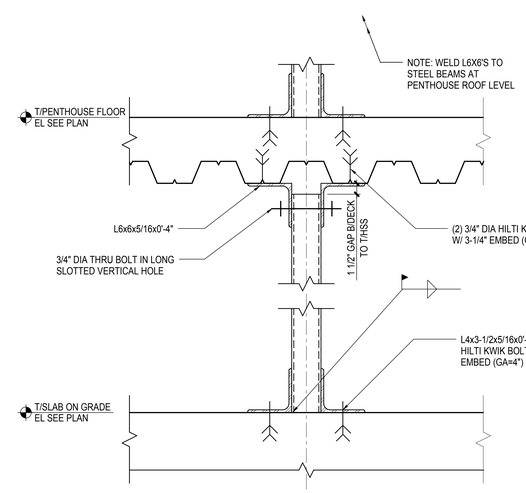

10 ELEVATOR RAIL SUPPORT FRAME CONNECTION TO FLOOR SLABS

1 1/2" = 1'-0"

SMITHGROUP
architecture engineering interiors planning
SMITHGROUP, INC
35 EAST WACKER
SUITE 2200
CHICAGO, IL 60601
T 312.641.0770
F 312.641.6728
www.smithgroup.com

JJR
landscape architecture
planning
urban design
civil engineering
environmental science
JJR, LLC
35 EAST WACKER DRIVE
SUITE 2200
CHICAGO, ILLINOIS 60601
312.641.0510 T
312.641.0668 F
www.jjr-us.com

Affiliated Engineers
Affiliated Engineers, Inc.
5802 Research Park Boulevard
Madison, Wisconsin 53719
Tel 608.238.2616 Fax 608.238.2614

Thornton Tomasetti
Thornton Tomasetti, Inc.
330 N. Wabash Avenue, Suite 1500
Chicago IL 60611-7622
T 312.596.2000 F 312.596.2001

TERRA
ENGINEERING LTD.
225 West Ohio Street, 4th Floor
Chicago, Illinois 60654
T:(312)467-0123 F:(312) 467-0220

SEALS AND SIGNATURES

STATE OF ILLINOIS
CAROL A. POST
081-004887
CHICAGO, ILLINOIS
LICENSED STRUCTURAL ENGINEER

PROJECT NORTH

REV. NO.	DESCRIPTION	BY	APVD	DATE
	ISSUED FOR CONSTRUCTION			07/03/12

Argonne NATIONAL LABORATORY

FMS
Facilities Management Services

PROJECT TITLE: ADVANCED PROTEIN CRYSTALLIZATION FACILITY, ARGONNE NATIONAL LABORATORY

PROJECT NO: C10539.00

DRAWING TITLE: TYPICAL STEEL BEAM DETAILS

DESIGNED: Designer	A/E CADD FILE: S5.1.3	FACILITY NO(S)
DRAWN: Author	A/E DWG. NO.: S5.1.3	
CHECKED: Checker	CAD NO.:	
PROJECT MANAGER: ANL - JESSE ADAMS	DWG STATE	
DATE - 08/31/11	BIND ORDER	

FACILITY DOCUMENT NUMBER: J446-101-W-

REV. NO.: S5.1.3

Plot Date: 6/27/2012 5:18:55 PM