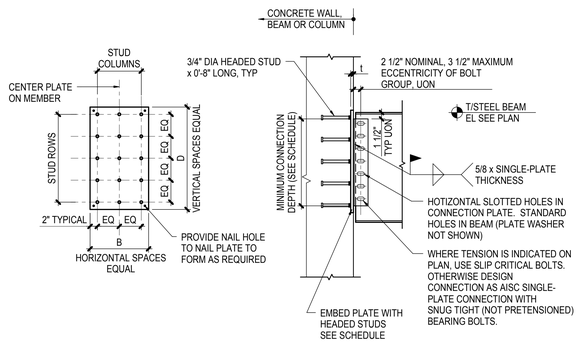

1 DETAIL
3/4" = 1'-0"

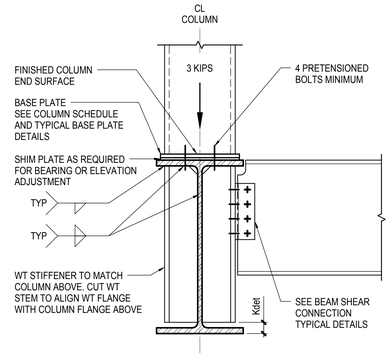

A HSS POST ABOVE MAIN ROOF

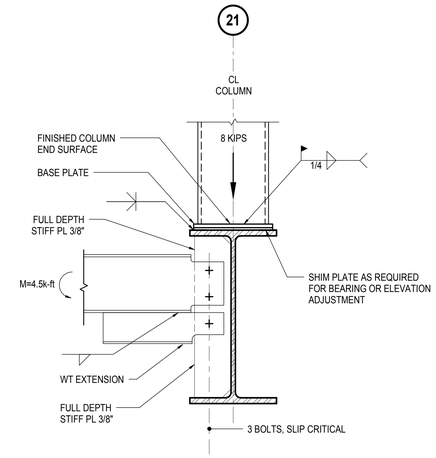

B HSS COLUMN AT CORRIDOR

2 TYPICAL COLUMN BEARING ON BEAM (COMPRESSION ONLY)
1" = 1'-0"

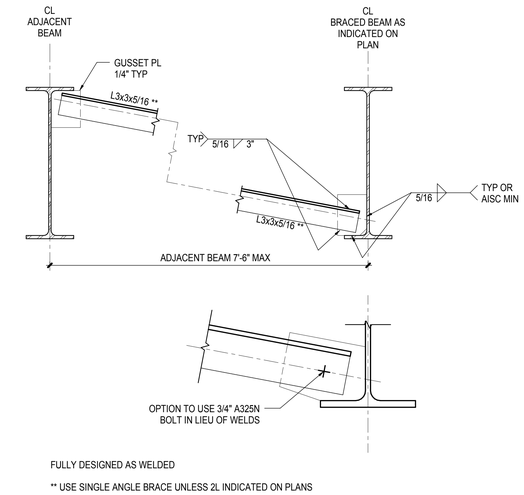

FULLY DESIGNED AS WELDED

** USE SINGLE ANGLE BRACE UNLESS 2L INDICATED ON PLANS

3 TYPICAL COMPRESSION FLANGE BRACE
1 1/2" = 1'-0"

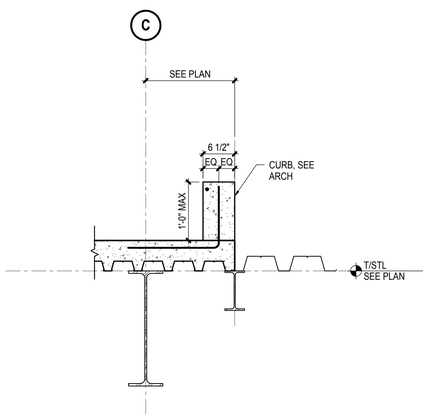

4 TRANSITION AT MECH. FLOOR
1" = 1'-0"

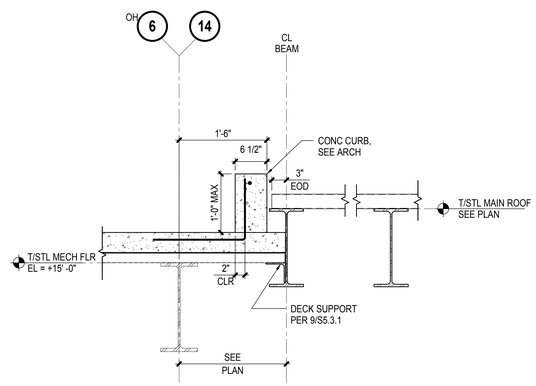

5 TRANSITION AT MECH FLOOR
1" = 1'-0"

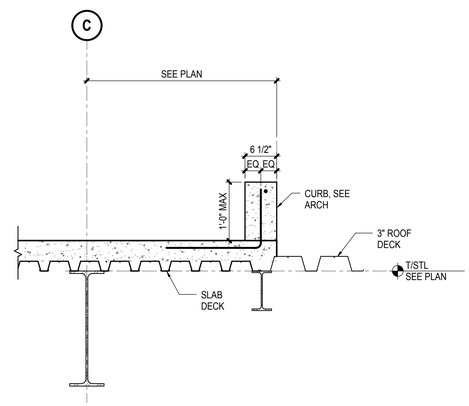

6 TRANSITION AT MECH. FLOOR
1" = 1'-0"

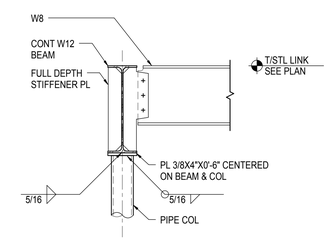

7 BEAM OVER COLUMN CONNECTION AT LOM ENTRY
1 1/2" = 1'-0"

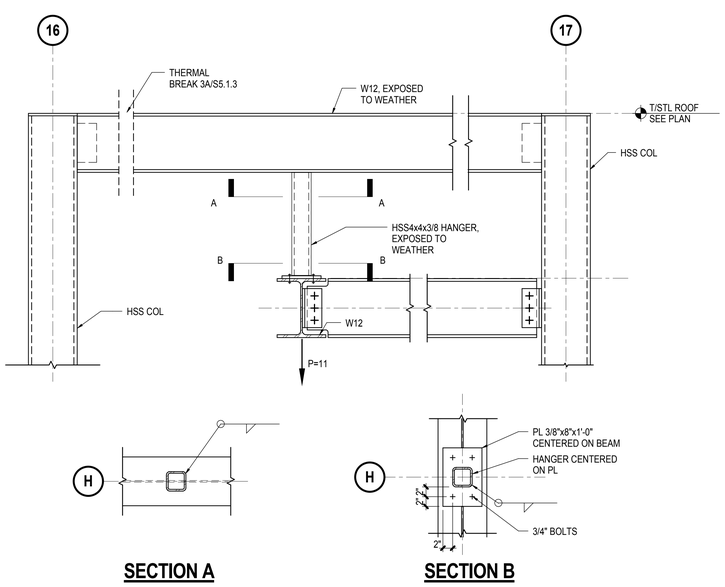

8 ENTRY CANOPY SECTION
1" = 1'-0"

EMBED PLATE SCHEDULE

NOMINAL STEEL BEAM SIZE	MAXIMUM FACTORED VERTICAL BEAM SHEAR REACTION (KIPS)	MINIMUM CONNECTION DEPTH (IN)	EMBED PLATE SIZE t (in) X B (in) X D (in)	No. STUD COLUMNS	No. STUD ROWS	REMARKS
W8	15	6	3/4 X 10 X 10	2	2	
W12	25/-5	9	3/4 X 10 X 16	2	3	BEAM HAS NET UPLIFT UNDER SAFE ROOM LOADING
W18	50	15	1 X 12 X 28	2	5	FOR REINFORCEMENT TO PLATE WELDS SEE 7/S3.2.1
W21	50/-15	15	3/4 X 12 X 28	2	5	BEAM HAS NET UPLIFT UNDER SAFE ROOM LOADING
W24	70	18	1 X 16 X 34	2	5	FOR REINFORCEMENT TO PLATE WELDS SEE 7/S3.2.1

9 EMBED PLATE SCHEDULE (SHEAR ONLY)
1" = 1'-0"

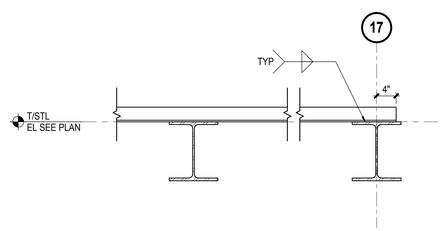

10 DECK EDGE SUPPORT DETAIL AT ENTRY CANOPY
1" = 1'-0"

SMITHGROUP
architecture engineering interiors planning
SMITHGROUP, INC
35 EAST WACKER
SUITE 2200
CHICAGO, IL 60601
T 312.641.0770
F 312.641.6728
www.smithgroup.com

JJR
landscape architecture planning urban design civil engineering environmental science
JJR, LLC
35 EAST WACKER DRIVE
SUITE 2200
CHICAGO, ILLINOIS 60601
312.641.0510 T
312.641.0668 F
www.jjr-us.com

AEI Affiliated Engineers
Affiliated Engineers, Inc.
5802 Research Park Boulevard
Madison, Wisconsin 53719
Tel 608.238.2616 Fax 608.238.2614

Thornton Tomasetti
Thornton Tomasetti, Inc.
330 N. Wabash Avenue, Suite 1500
Chicago IL 60611-7622
T 312.596.2000 F 312.596.2001

TERRA ENGINEERING LTD.
225 West Ohio Street, 4th Floor
Chicago, Illinois 60654
T:(312)467-0123 F:(312) 467-0220

SEALS AND SIGNATURES

STATE OF ILLINOIS
CAROL A. POST
081-004887
CHICAGO, ILLINOIS
LICENSED STRUCTURAL ENGINEER

PROJECT NORTH

REV. NO.	DESCRIPTION	BY	APVD	DATE
	ISSUED FOR CONSTRUCTION			07/03/12

Argonne NATIONAL LABORATORY

FMS
Facilities Management Services

PROJECT TITLE: ADVANCED PROTEIN CRYSTALLIZATION FACILITY, ARGONNE NATIONAL LABORATORY

PROJECT NO: C10539.00

DRAWING TITLE: STEEL DETAILS

DESIGNED Designer	A/E CADD FILE S5.1.4	FACILITY NO(S)
DRAWN Author	A/E DWG. NO. S5.1.4	
CHECKED Checker	CAD NO:	
PROJECT MANAGER ANL - JESSE ADAMS DATE - 08/31/11	DWG STATE	
	BIND ORDER	

FACILITY DOCUMENT NUMBER: J446-101-W- S5.1.4 REV. NO.

Plot Date: 6/27/2012 5:18:59 PM