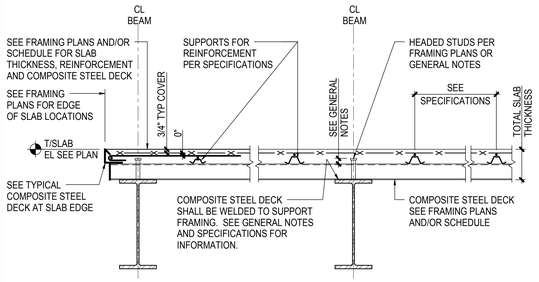

1 TYPICAL COMPOSITE STEEL DECK SPAN PERPENDICULAR TO BEAM

NOT TO SCALE

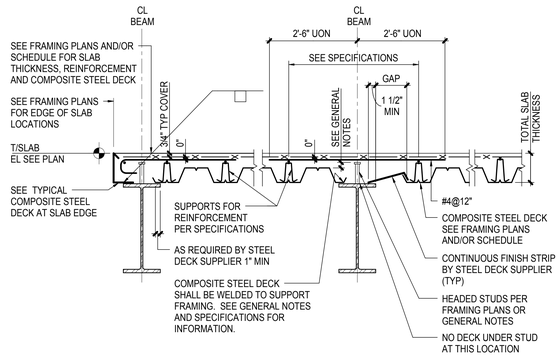

2 TYPICAL COMPOSITE STEEL DECK SPAN PARALLEL TO BEAM

NOT TO SCALE

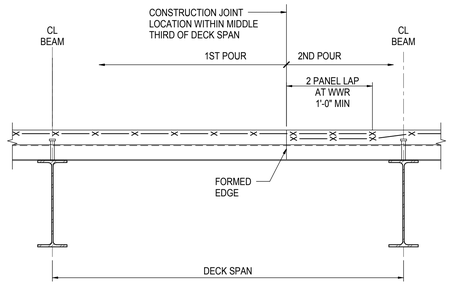

3 TYPICAL COMPOSITE STEEL DECK CONSTRUCTION JOINT SPAN PERPENDICULAR TO BEAM

NOT TO SCALE

COMPOSITE STEEL DECK SCHEDULE

SLAB MARK	TOTAL SLAB DEPTH AND CONC TYPE	STEEL DECK (MIN)	CONCRETE TOPPING SLAB	SLAB REINFORCEMENT	NOTES
S1	6 1/4" LWC	2"-20 GA	NONE	6 x 6 - W2.9 x W2.9 WWR	
S2	6 1/4" LWC	2"-20 GA	NONE	#4@18" EW	

ROOF DECK SCHEDULE

ROOF DECK MARK	ROOF DECK (MIN)	UNFACTORED DIAPHRAGM SHEAR (PLF)	NOTES
R1	1 1/2" ROOF 20 GA-TYPE B	SEE GENERAL NOTES	
R2	3" ROOF-20 GA	SEE GENERAL NOTES	

4 STEEL DECK SCHEDULE

NOT TO SCALE

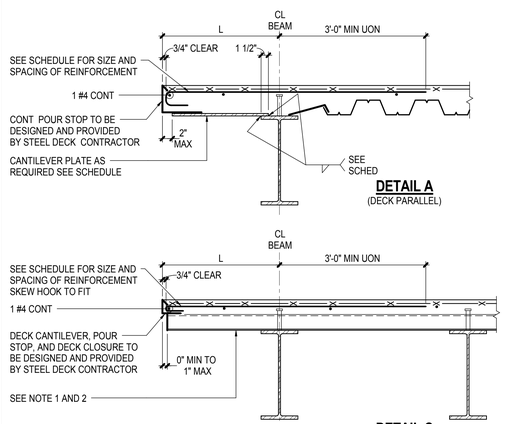

NOTES:
1. WHERE BLOCKOUT OR EMBEDDED ITEM IS LOCATED AT THE SLAB EDGE, DETAIL C IS NOT PERMITTED. USE DETAIL A OR DETAIL B FOR CANTILEVERED SLAB EDGE
2. WHERE DECK CANTILEVER (DETAIL C) IS NOT CAPABLE OF SUPPORTING REQUIRED CANTILEVER SPAN 'L', USE DETAIL A OR DETAIL B SIMILAR FOR CANTILEVER SLAB EDGE

5 TYPICAL COMPOSITE STEEL DECK AT SLAB EDGE

NOT TO SCALE

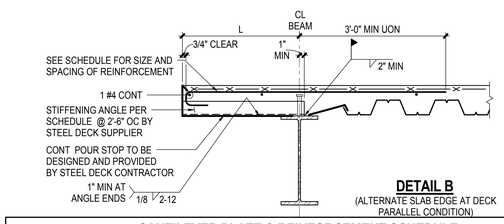

CANTILEVER PLATE & REINFORCEMENT SCHEDULE

TOTAL SLAB THICKNESS (IN)	CANTILEVER SPAN 'L'	CANTILEVER REINFORCEMENT (SEE NOTES)	DETAIL A			DETAIL B
			PLATE THICKNESS (A36 MIN)	PLATE TO FLANGE WELD		STIFFENING ANGLE
				SIZE	SPACING	
UP TO 5 1/2" (2 1/2" MIN CONC THICKNESS OVER DECK)	1'-2" < L ≤ 2'-3"	#4@12"	1/4"	3/16	3-12	L3x3x1/4
	≤ 1'-2"	-	NOTE 2	-	-	NOTE 2
6 1/4" TO 7 1/2" (3 1/4" MIN CONC THICKNESS OVER DECK)	1'-9" < L ≤ 2'-3"	#4@12"	3/8"	1/4	4-12	L3x3x1/4
	11" < L ≤ 1'-9"	#4@12"	1/4"	3/16	3-12	L3x3x1/4
	≤ 11"	-	NOTE 2	-	-	NOTE 2
OVER 7 1/2" UP TO 11" (4 1/2" MIN CONC THICKNESS OVER DECK)	1'-6" < L ≤ 2'-3	#4@10"	3/8"	1/4	4-12	L3x3x1/4
	6" < L ≤ 1'-6"	#4@10"	1/4"	3/16	3-12	L3x3x1/4
	≤ 6"	-	NOTE 2	-	-	NOTE 2

SCHEDULE NOTES:
1. SEE ADDITIONAL DETAILS FOR REINF AT CURTAIN WALL SUPPORT AND AT CORNERS
2. POUR STOP TO BE DESIGNED AND PROVIDED BY STEEL DECK CONTRACTOR
3. CANTILEVER REINFORCEMENT IS IN ADDITION TO ANY REINFORCEMENT SHOWN IN NOTES, ON PLAN OR ON SLAB SCHEDULES
4. SLAB EDGE SERVICE LOADS NOT TO EXCEED 400PLF

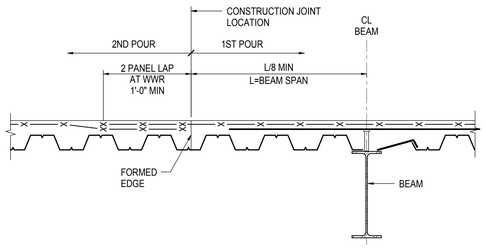

6 TYPICAL COMPOSITE STEEL DECK CONSTRUCTION JOINT SPAN PARALLEL TO BEAM

NOT TO SCALE

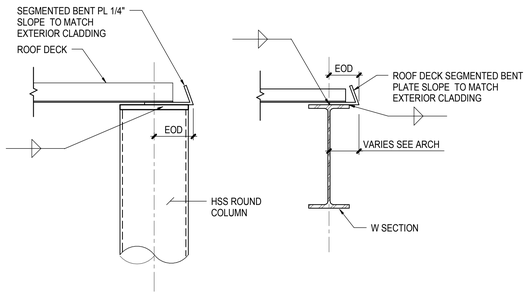

7 DECK CLOSURE AT CONFERENCE ROOM (EOD UP TO 1'-6")

1" = 1'-0"

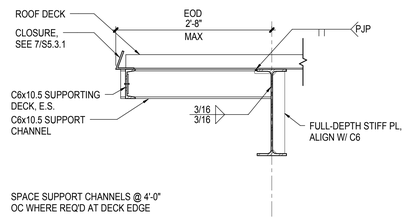

8 DECK EDGE SUPPORT @ CONFERENCE ROOM (EOD > 1'-6" ≤ 2'-8")

NOT TO SCALE

NOTES:

1. SEE GENERAL NOTES FOR HEADED STUD SIZE, LENGTH, AND MAXIMUM SPACING. NUMBER OF STUDS IS INDICATED ON FRAMING PLAN.
2. HEADED STUDS IN ONE ROW SHALL BE PLACED DIRECTLY OVER THE BEAM WEB.
3. PLACE STUDS IN A SINGLE ROW WHERE SPACING REQUIREMENTS PERMIT. STUDS SHALL BE PLACED IN TWO ROWS OR THREE ROWS ONLY WHERE REQUIRED IN ORDER TO PLACE THE TOTAL NUMBER OF STUDS.
4. MAXIMUM NUMBER OF STUDS PERMITTED PER INDIVIDUAL METAL DECK RIB IS 3.
5. STUD PLACEMENT PROCEDURE FOR DECK PERPENDICULAR TO SUPPORT: PLACE A STUD IN ALTERNATING FLUTES FOR ENTIRE LENGTH OF BEAM. PLACE REMAINING STUDS IN FLUTES WITHOUT STUDS, STARTING AT THE ENDS OF THE BEAM AND CONTINUING TO BEAM CENTER. DISTRIBUTE HEADED STUDS EQUALLY FROM EACH END. IF STUDS REMAIN, PLACE A SECOND STUD IN EACH FLUTE, EQUALLY SPACED FROM EACH END TOWARD CENTER OF BEAM. IF STUDS REMAIN, PLACE A THIRD STUD IN EACH FLUTE, EQUALLY SPACED FROM EACH END TOWARD CENTER OF BEAM.
6. SUBMIT SHOP DRAWINGS SHOWING PLACEMENT OF HEADED STUDS PER SPECIFICATION.

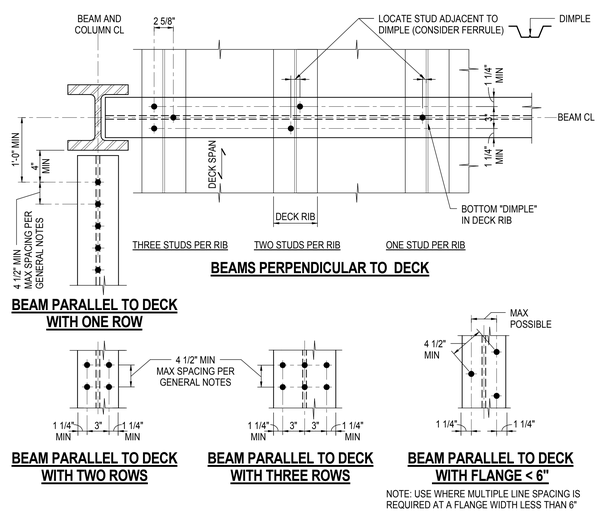

NOTE: USE WHERE MULTIPLE LINE SPACING IS REQUIRED AT A FLANGE WIDTH LESS THAN 6"

9 TYPICAL HEADED STUD SPACING DETAIL

3/4" = 1'-0"

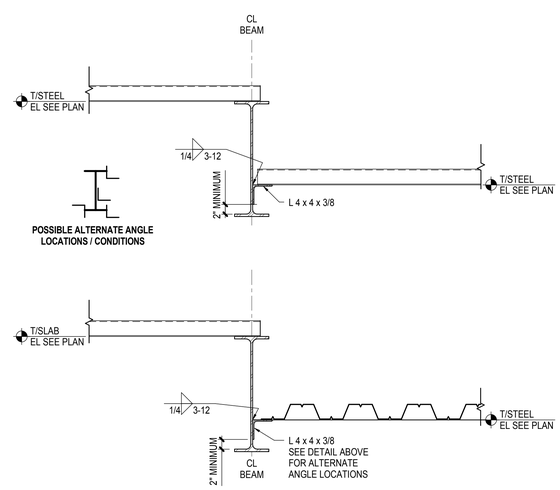

10 TYPICAL CHANGE IN SLAB ELEVATION (BEAM AT HIGH DECK)

1" = 1'-0"

SMITHGROUP
architecture engineering interiors planning
SMITHGROUP, INC
35 EAST WACKER
SUITE 2200
CHICAGO, IL 60601
T 312.641.0770
F 312.641.6728
www.smithgroup.com

JJR
landscape architecture planning urban design civil engineering environmental science
JJR, LLC
35 EAST WACKER DRIVE
SUITE 2200
CHICAGO, ILLINOIS 60601
312.641.0510 T
312.641.0668 F
www.jjr-us.com

Affiliated Engineers
Affiliated Engineers, Inc.
5802 Research Park Boulevard
Madison, Wisconsin 53719
Tel 608.238.2616 Fax 608.238.2614

Thornton Tomasetti
Thornton Tomasetti, Inc.
330 N. Wabash Avenue, Suite 1500
Chicago IL 60611-7622
T 312.596.2000 F 312.596.2001

TERRA ENGINEERING LTD.
225 West Ohio Street, 4th Floor
Chicago, Illinois 60654
T:(312)467-0123 F:(312) 467-0220

SEALS AND SIGNATURES

STATE OF ILLINOIS
CAROL A. POST
081-004987
CHICAGO, ILLINOIS
LICENSED STRUCTURAL ENGINEER

PROJECT NORTH

REV. NO.	DESCRIPTION	BY	APVD	DATE
	ISSUED FOR CONSTRUCTION			07/03/12

Argonne NATIONAL LABORATORY

FMS
Facilities Management Services

PROJECT TITLE: ADVANCED PROTEIN CRYSTALLIZATION FACILITY, ARGONNE NATIONAL LABORATORY

PROJECT NO: C10539.00

DRAWING TITLE: TYPICAL COMPOSITE AND STEEL DECK DETAILS

DESIGNED: Designer	A/E CADD FILE: S5.3.1	FACILITY NO(S)
DRAWN: S.S.	A/E DWG. NO.: S5.3.1	
CHECKED: Checker	CAD NO.:	
PROJECT MANAGER: ANL - JESSE ADAMS, DATE - 08/31/11	DWG STATE	
	BIND ORDER	

FACILITY DOCUMENT NUMBER: J446-101-W- S5.3.1 REV. NO.

Plot Date: 6/27/2012 5:19:03 PM