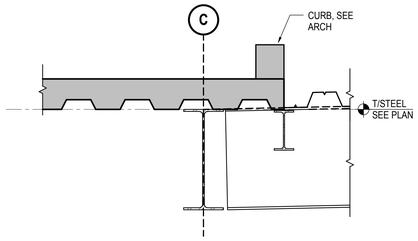

1 LAB ROOF/PENTHOUSE INTERFACE
1" = 1'-0"

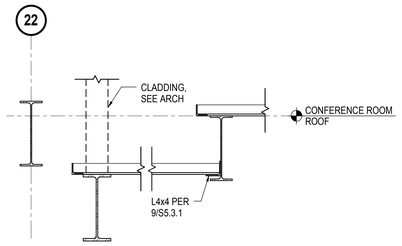

2 ROOF SECTION AT CONFERENCE ROOM CONDITION SOUTH OF GRID Q
3/4" = 1'-0"

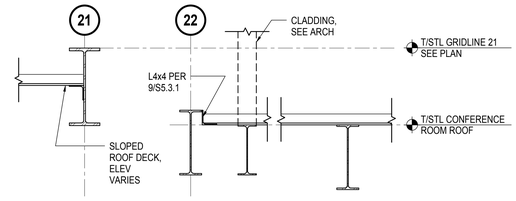

3 ROOF SECTION AT CONFERENCE ROOM CONDITION NORTH OF GRID Q
NOT TO SCALE

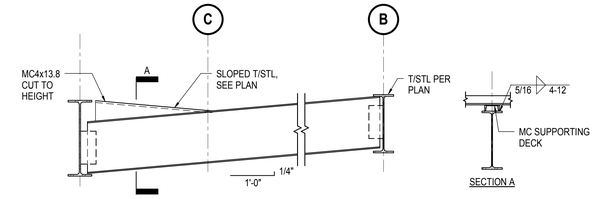

4 BUILT-UP BEAM SUPPORTING SLOPED DECK TRANSITION
NOT TO SCALE

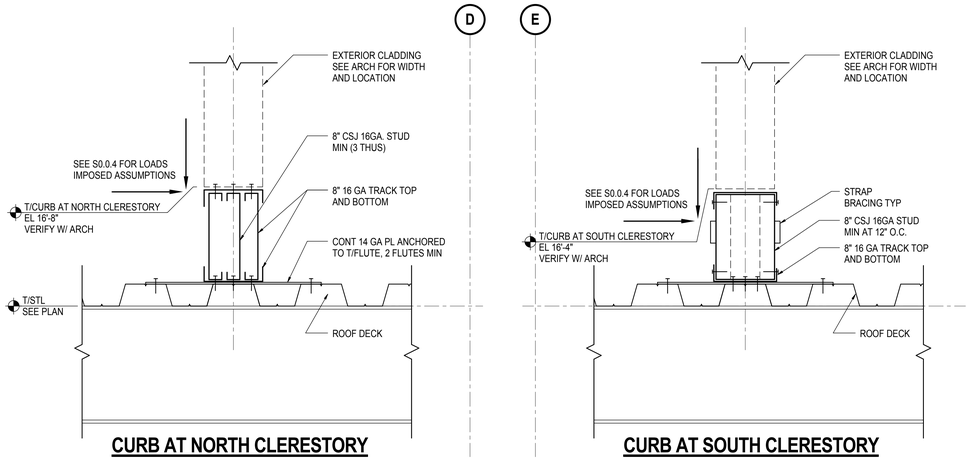

NOTE: DETAILS SHOWN ARE CONCEPTUAL. METAL STUD CONTRACTOR TO ENGINEER SOLUTION FOR LOADING SHOWN

5 EXTERIOR CLADDING CURB WHERE CLADDING BEARS ON ROOF DECK
1 1/2" = 1'-0"

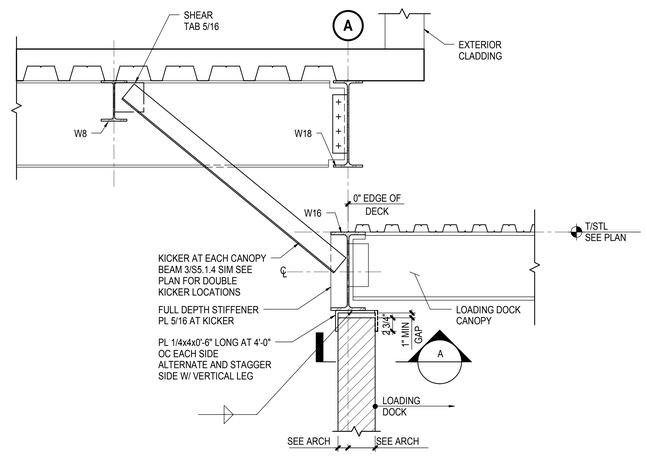

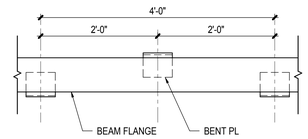

A DETAIL

6 EXTERIOR CMU AND CLADDING SUPPORTS AT LOADING DOCK
1" = 1'-0"

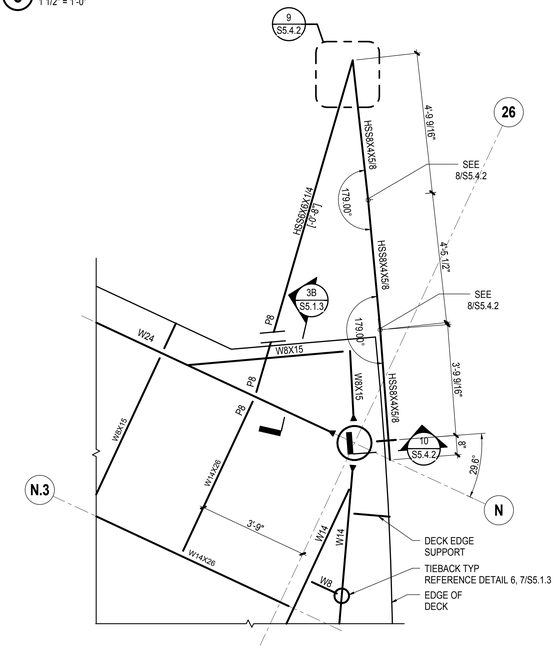

7 ENLARGED PLAN AT WING WALL CORNER
1/2" = 1'-0"

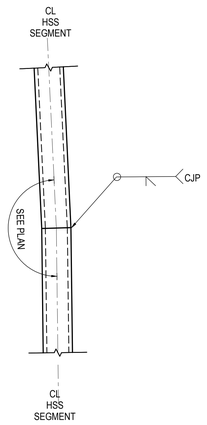

8 HSS CURVATURE @ WING WALL
1 1/2" = 1'-0"

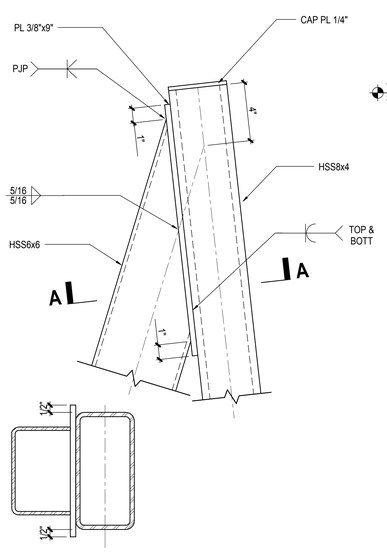

SECTION A

COMPLETELY DESIGNED

9 HSS TRUSS CONNECTION @ WING WALL
3" = 1'-0"

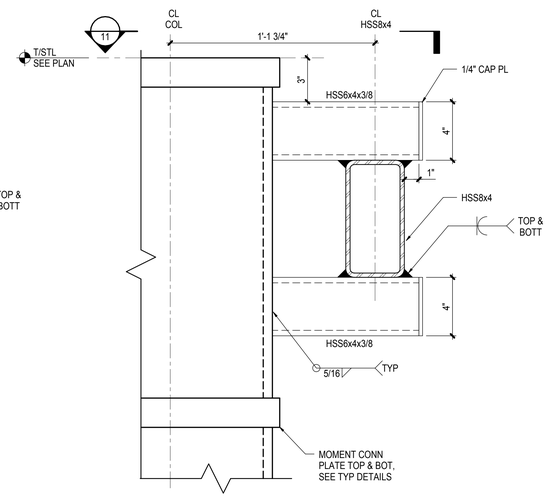

COMPLETELY DESIGNED

10 WING WALL SUPPORT CONNECTION
3" = 1'-0"

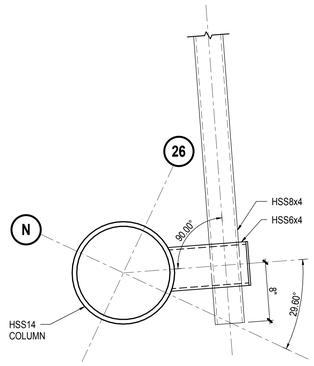

11 PLAN VIEW AT WING WALL SUPPORT CONNECTION
NOT TO SCALE

SMITHGROUP
architecture engineering interiors planning
SMITHGROUP, INC
35 EAST WACKER
SUITE 2200
CHICAGO, IL 60601
T 312.641.0770
F 312.641.6728
www.smithgroup.com

JJR
landscape architecture planning urban design civil engineering environmental science
JJR, LLC
35 EAST WACKER DRIVE
SUITE 2200
CHICAGO, ILLINOIS 60601
312.641.0510 T
312.641.0668 F
www.jjr-us.com

AEI Affiliated Engineers
Affiliated Engineers, Inc.
5802 Research Park Boulevard
Madison, Wisconsin 53719
Tel 608.238.2616 Fax 608.238.2614

Thornton Tomasetti
Thornton Tomasetti, Inc.
330 N. Wabash Avenue, Suite 1500
Chicago IL 60611-7622
T 312.596.2000 F 312.596.2001

TERRA ENGINEERING LTD.
225 West Ohio Street, 4th Floor
Chicago, Illinois 60654
T:(312)467-0123 F:(312) 467-0220

SEALS AND SIGNATURES

STATE OF ILLINOIS
CAROL A. POST
081-004887
CHICAGO, ILLINOIS
LICENSED STRUCTURAL ENGINEER

PROJECT NORTH

REV. NO.	DESCRIPTION	BY	APVD	DATE
	ISSUED FOR CONSTRUCTION			07/03/12

Argonne NATIONAL LABORATORY

FMS
Facilities Management Services

PROJECT TITLE: ADVANCED PROTEIN CRYSTALLIZATION FACILITY, ARGONNE NATIONAL LABORATORY

PROJECT NO: C10539.00

DRAWING TITLE: STEEL FRAMING SECTIONS

DESIGNED Designer	A/E CADD FILE S5.4.2	FACILITY NO(S)
DRAWN Author	A/E DWG. NO. S5.4.2	
CHECKED Checker	CAD NO:	
PROJECT MANAGER ANL - JESSE ADAMS DATE - 08/31/11	DWG STATE	
	BIND ORDER	
FACILITY DOCUMENT NUMBER J446-101-W-		REV. NO. S5.4.2

Plot Date: 6/27/2012 5:19:17 PM