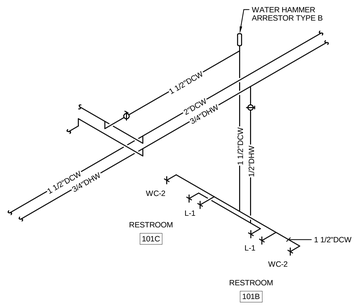

A WATER

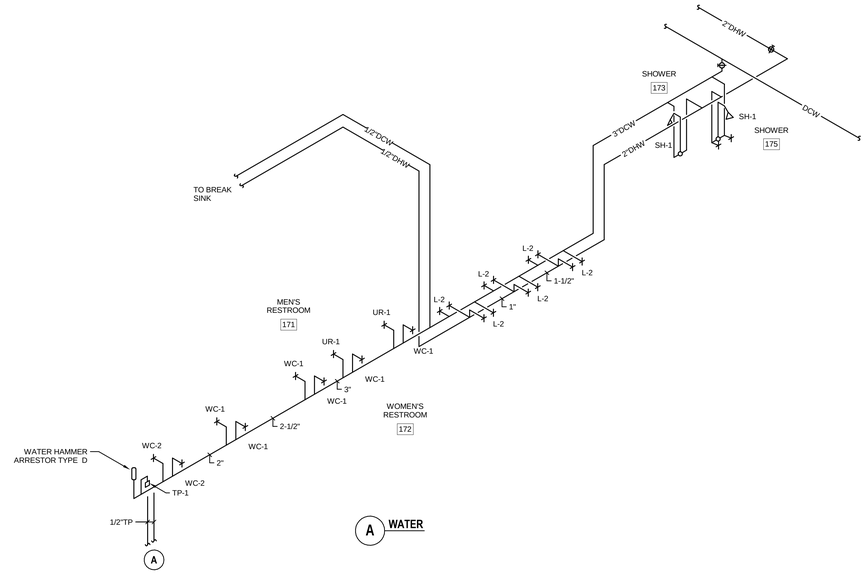

A WATER

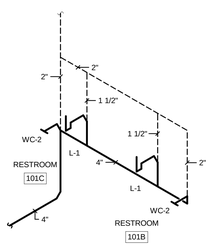

B WASTE AND VENT

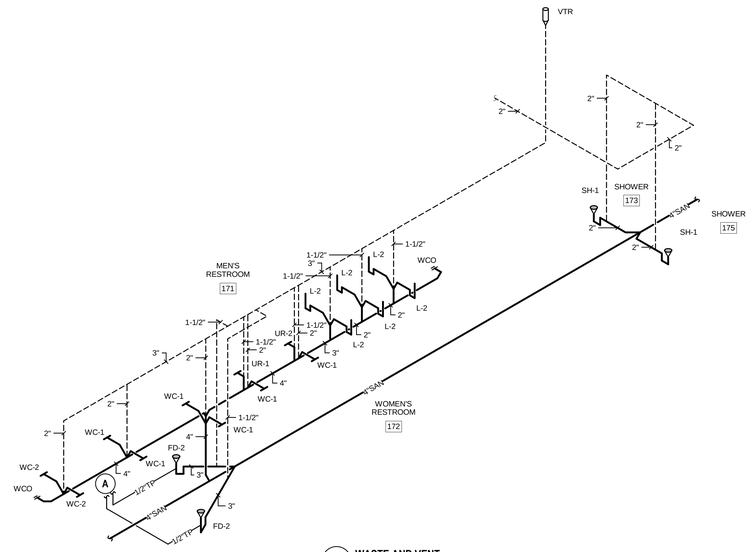

B WASTE AND VENT

2 TOILET ROOM ISOMETRIC (101B,101C)

NOT TO SCALE

1 TOILET ROOM ISOMETRIC (171,172)

NOT TO SCALE

SMITHGROUP
architecture engineering interiors planning

SMITHGROUP, INC
35 EAST WACKER
SUITE 2200
CHICAGO, IL 60601
T 312.641.0770
F 312.641.6728
www.smithgroup.com

JJR
landscape architecture
planning
urban design
civil engineering
environmental science

JJR, LLC
35 EAST WACKER DRIVE
SUITE 2200
CHICAGO, ILLINOIS 60601
312.641.0510 T
312.641.0668 F
www.jjr-us.com

AEI Affiliated Engineers

Affiliated Engineers, Inc.
5802 Research Park Boulevard
Madison, Wisconsin 53719
Tel 608.238.2616 Fax 608.238.2614

Thornton Tomasetti

Thornton Tomasetti, Inc.
330 N. Wabash Avenue, Suite 1500
Chicago IL 60611-7622
T 312.596.2000 **F** 312.596.2001

TERRA ENGINEERING LTD.
225 West Ohio Street, 4th Floor
Chicago, Illinois 60654
T:(312)467-0123 F:(312) 467-0220

SEALS AND SIGNATURES

SCOTT P. FORBES
062-059117
LICENSED
PROFESSIONAL
ENGINEER
OF
ILLINOIS
STATE OF ILLINOIS
EXPIRES 11-30-13

REV. NO.	DESCRIPTION	BY	APVD	DATE
	ISSUED FOR CONSTRUCTION			07/03/12

Argonne NATIONAL LABORATORY

FMS
Facilities Management Services

PROJECT TITLE ADVANCED PROTEIN CRYSTALLIZATION FACILITY, ARGONNE NATIONAL LABORATORY

PROJECT NO 08541-00

DRAWING TITLE

TOILET ROOM ISOMETRICS

DESIGNED SAB	A/E CADD FILE P5.2.0	FACILITY NO(S)
DRAWN JJG	A/E DWG. NO. P5.2.0	
CHECKED SAB	CAD NO:	
PROJECT MANAGER ANL - JESSE ADAMS DATE - 12/22/11	DWG STATE	
	BIND ORDER	
FACILITY DOCUMENT NUMBER J446-101-W-	P5.2.0	REV. NO.

Plot Date: 6/29/2012 2:41:29 PM