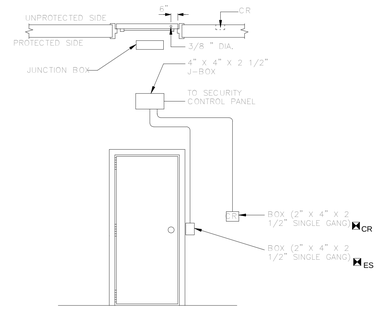

4 **DOOR SECURITY DETAIL**
SCALE:

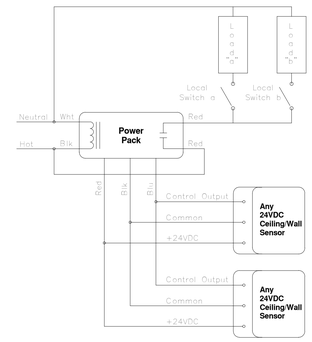

1 **OCCUPANCY SENSOR DETAIL**
SCALE: NONE

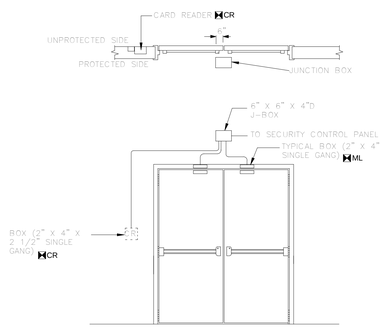

5 **DOOR SECURITY DETAIL**
SCALE:

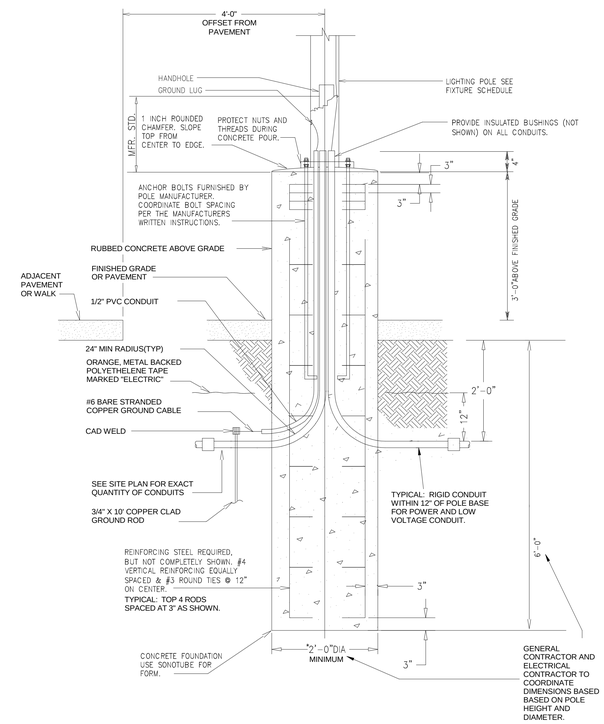

2 **LIGHTING POLE BASE DETAIL**
SCALE: NONE

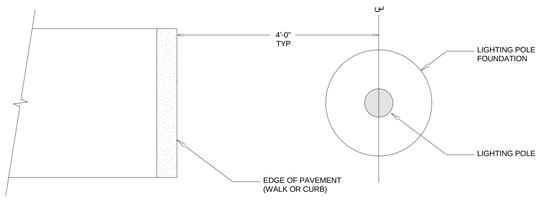

3 **TYPICAL PLACEMENT LIGHTPOLE/FOUNDATION**
SCALE: NONE

SMITHGROUP
architecture engineering interiors planning
SMITHGROUP, INC
35 EAST WACKER
SUITE 2200
CHICAGO, IL 60601
T 312.641.0770
F 312.641.6728
www.smithgroup.com

JJR landscape architecture planning urban design civil engineering environmental science
JJR, LLC
35 EAST WACKER DRIVE
SUITE 2200
CHICAGO, ILLINOIS 60601
312.641.0510 T
312.641.0668 F
www.jjr-us.com

AEI Affiliated Engineers
Affiliated Engineers, Inc.
5802 Research Park Boulevard
Madison, Wisconsin 53719
Tel 608.238.2616 Fax 608.238.2614

Thornton Tomasetti
Thornton Tomasetti, Inc.
330 N. Wabash Avenue, Suite 1500
Chicago IL 60611-7622
T 312.596.2000 F 312.596.2001

TERRA ENGINEERING LTD.
225 West Ohio Street, 4th Floor
Chicago, Illinois 60654
T:(312)467-0123 F:(312) 467-0220

SEALS AND SIGNATURES

REV. NO.	DESCRIPTION	BY	APVD	DATE
	ISSUED FOR CONSTRUCTION			07/03/12

Argonne NATIONAL LABORATORY

FMS
Facilities Management Services

PROJECT TITLE ADVANCED PROTEIN CRYSTALLIZATION FACILITY, ARGONNE NATIONAL LABORATORY

PROJECT NO 08541-00

DRAWING TITLE
ELECTRICAL DETAILS

DESIGNED DLW	A/E CADD FILE E8.0.4	FACILITY NO(S)
DRAWN DLW	A/E DWG. NO. E8.0.4	
CHECKED BRB	CAD NO:	
PROJECT MANAGER ANL - JESSE ADAMS DATE - 11/07/11	DWG STATE	
	BIND ORDER	
FACILITY DOCUMENT NUMBER J446-101-W-	E8.0.4	REV. NO.

Plot Date: 6/29/2012 1:18:53 PM