NEW INSIGHTS INTO THE STRUCTURE OF COAL AND COAL MACERALS. R. J. Pugmire, A. Soderquist, A. L. Beeler, and D. M. Grant, Departments of Fuels Engineering and Chemistry, University of Utah, Salt Lake City, Utah 84112.

The use of dipolar dephasing techniques has been demonstrated as a very useful probe into the details of the carbon skeletal structure of whole coals and coal maceral groups. The data thus obtained indicates that T_2 values observed in coals and coal macerals are comparable to those observed in model organic compounds with similar types of structural units. Hence, relative amounts of protonated and nonprotonated carbons can be obtained from detailed dipolar dephasing studies. These data also reveal the presence of a highly mobile phase in the aliphatic region of the spectra of low rank coals. A comparison of the skeletal structural units in low rank coals, liptinite, vitrinite, and inertinite maceral groups and variations within maceral groups separated by density gradient centrifugation techniques will be given.

MACROMOLECULAR STRUCTURE AND COALIFICATION. J. W. Larsen, Dept. of Chemistry, Lehigh University, Bethlehem, PA 18015

After having been proposed and ignored several times, the macromolecular gel structure of coals is gaining acceptance. It provides a useful and enlightening framework within which to discuss the coalification process. Indeed, if early results are general, major revisions in coalification models will be necessary. Between ca 78% C and 86% C, the cross-link densities of coals generally decrease. Over this range, coalification is probably a depolymerization. This notion is supported by the molecular weight distributions of pyridine extracts. Above 88% C, a rapid polymerization takes place as coalification increases. It is possible that the depolymerization results in part from a loss of ether linkages during coalification. It is tempting to associate the increase in cross-link density above 88% C with bonds formed as a result of dehydrogenation. Natural deoxygenation and dehydrogenation have very different consequences for coal structure.

SOME STRUCTURAL CHARACTERISTICS OF AUSTRALIAN COALS. R. B. Johns, T. V. Verheyen, Chemistry School, University of Melbourne, Australia.

Victorian brown coal occurs in five lithotypes. Pyrolysis-MS groups them into two sets, the resinous content distinguishing the darker from the lighter lithotypes. Chemically they vary between seams (the oldest being the most aliphatic), but the same chemical trends are shown within each lithotype profile. Even though seams differ and aromaticities by solid state ^{13}C nmr can differ, IR spectral substraction routines between lithotypes confirm the correlation between loss of carbonyl absorption and loss of aliphatic absorption. Humic acids fractionated from an aliphatic south Australian lignite qualitatively are similar in aliphatic components, but the most soluble humic acid in the profile is also the most aliphatic and is dominated by long chain structures. These aliphatic residues are bonded into this humic acid fraction. The light, in contrast to the dark lithotypes, show more degraded lignin phenolic components, consistent with gelification in chemical terms, but at variance with petrographic assessments. The aromatic residues are chemically involved in upgrading reactions of brown coals to technologically valuable low-moisture-content fuels. The chemistry of the lithotype and seam dependence of the upgrading procedures will be discussed.

ACTION OF PEROXY ACIDS ON COALS. Norman C. Deno, Chemistry Dept., Pennsylvania State University, University Park, PA 16802.

Peroxyacetic acid reacts with vitrinite coals to open some of the phenolic rings to hexadienedioic acids without loss of carbon. The product is soluble in methanol and largely soluble in water. There is no evidence for any other action from yields and spectra, and the view is supported by model studies on poly-p-vinylphenol.

The action of trifluoroperoxyacetic acid is more extensive. The diene diacids are degraded so that the final products are largely the aliphatic components attached to carboxylic or maleic acid groups. Isolated methylenes do not survive. The major products are oxiranetri and tetracarboxylic acids derived from phenolic acids and polyaromatic phenols, benzenetetracarboxylic acids from dihydroanthracene moieties, malonic acid of uncertain origin, acetic acid from arylmethyl, and methanol from arylmethoxy. Minor amounts of pyridine polyacids indicate acridine precursors. Significant amounts of products are not volatile and so their methyl esters and their nature has not been determined.

USE OF AQUEOUS CATALYTIC PROCESSING FOR WATER-GAS SHIFT CONVERSION

Douglas C. Elliott and L. John Sealock, Jr.

Pacific Northwest Laboratory*
P.O. Box 999
Richland, WA 99352

INTRODUCTION

The water-gas shift reaction involves the reaction of carbon monoxide and steam to produce hydrogen and carbon dioxide and derived its name from its industrial use to increase the hydrogen content of water gas produced from the reaction of steam with hot coke or coal. Current interest in this reaction lies in the tailoring of the hydrogen to carbon monoxide ratio of gas streams employed for chemical synthesis. For example, product gas from a typical coal gasification unit may have an H_2 to CO ratio of approximately 1 to 1 while the synthesis gas composition required for methanol production would have a ratio of 2 to 1 and the ratio for methane synthesis is 3 to 1.

The study of catalysts for this reaction has focused primarily on heterogeneous catalysts (1). Specifically, iron oxide-chromium oxide catalysts have been used at high temperature (350 to 450°C) and newer low temperature (200-260°C) copper-zinc oxide catalysts have been developed for secondary treatment of gas product streams. The low-temperature catalysts are particularly susceptible to poisoning by chlorine or sulfur as well as deactivation due to sintering. More recent studies of homogeneous catalysts for the water-gas shift reaction have dealt primarily with organometallics (2,3).

The use of a high-pressure water system for the water-gas shift reaction was first proposed by Casale (4) although he was unaware of the potential of basic catalyst solutions. The pressurized water system finds its advantage in a kinetic effect due to pressure as well as a shift in product composition due to the large excess of water driving the reaction to completion. The work of Yoneda et al. (5) during World War II established the concept of using an aqueous solution of metal carbonate as a catalyst for the water-gas shift reaction. This work included a comparative study of a large number of transition metals; however, potassium was the only alkali metal tested. The application of this mechanism in a process scheme was recently examined (6).

PROCESS DESCRIPTION

The water-gas shift concept being developed at Pacific Northwest Laboratory is a continuous process in which raw product gas is contacted with an aqueous catalyst system in the temperature range of 250 to 350°C and at pressures from 500 to 2500 psig. The catalyst of choice is sodium carbonate at a concentration of 6% in water, but any material which can generate hydroxide ions at the process conditions will effectively catalyze the reaction (7). Previous batch scale research conducted under sponsorship of the Gas Research Institute (8) has demonstrated the chemistry of the concept and has substantiated that the reaction rates of the experiments varied depending upon catalyst concentration, temperature and pressure. Based on these rates it is apparent that useful water-gas shift conversion can be obtained with the aqueous system and that the required gas contacting time is in the range of minutes depending on the extent of shift reaction required. These batch studies proved that a simple system of circulating the reactant gas

*Operated by Battelle Memorial Institute.

through an aqueous pool of catalyst sealed in a high pressure autoclave can be used to study the reaction chemistry of the concept.

Current research being funded by the U.S. Department of Energy Morgantown Energy Technology Center is designed to demonstrate the concept of continuous use of an aqueous catalyst system for conducting the water-gas shift reaction and to prove the initial engineering of continuous processing. Work in progress is designed to:

- establish optimum operating conditions;
- determine pressure effects and limitations;
- establish catalyst lifetimes;
- obtain kinetic information;
- determine H_2S removal efficiencies;
- establish tar and oil removal/conversion efficiencies;
- determine catalyst regeneration/recycle requirements and catalyst costs;
- establish effect of gas residence times and concentration on conversion efficiencies;
- determine the improvement to current technology; and
- establish cost savings/benefits.

MECHANISM OF CONVERSION

The chemistry of aqueous alkali catalyzed water-gas shift conversion can be described as a cyclical scheme as depicted below.

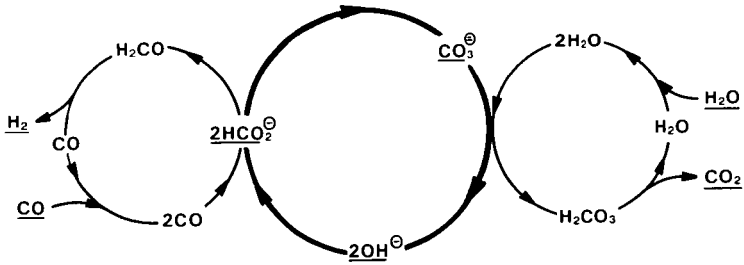

The ionization of the carbonate catalyst generates hydroxide ions which react in the presence of carbon monoxide at the processing conditions to produce formate ions. Two formate ions can then rearrange to formaldehyde and carbonate to complete the cycle. The rapid decomposition of the formaldehyde results in the production of hydrogen. We have described the elucidation of this cycle previously (9).

PROCESS ADVANTAGES

Operation of the water-gas shift reaction in the pressurized aqueous system has several processing advantages. These advantages are related to the chemical equilibrium of the system, the range of catalysts which can be used, and improvements specific to the incorporation of this type of water-gas shift process into a pressurized, coal (or other carbonaceous material) gasification system.

- Equilibrium Considerations

Thermodynamic studies have shown that the water-gas shift reaction is limited by equilibrium considerations at high temperature and that the conversion of CO to

CO_2 is not complete. This equilibrium condition is the major impetus for the development of a low-temperature water-gas shift catalyst. The current commercial water-gas shift processing technology utilizes a two-step system wherein the bulk of the reaction occurs at high temperature. The temperature is lower in the second catalyst bed to obtain a more favorable equilibrium gas composition at the exit from the water-gas shift system. The aqueous alkali catalyst system maintains this low temperature advantage because it exhibits substantial activity at temperatures as low as 250°C. The effect of temperature on catalytic conversion of carbon monoxide by the water-gas shift reaction using 0.32M sodium carbonate aqueous catalyst is depicted in Figure 1. The data shows the measurable activity begins in the range of 200 to 250°C while very high activity is attained at temperatures of 350°C and above. In addition, the use of the pressurized water system gives added driving force to the water-gas shift reaction. The large excess of water tends to push the reaction to completion in the presence of the alkali catalyst.

Range of Catalyst Choice

Current water-gas shift processing requires a high temperature catalyst, usually a combination of cobalt and molybdenum oxides or iron and chromium oxides on an alumina support, and/or a low temperature copper-zinc oxide catalyst formulation. The latter are sensitive to deactivation by sulfur-containing compounds. All are orders of magnitude more expensive than the water solution of alkali carbonate used in our system. The recent development of homogeneous organometallic catalysts also holds potential for lower temperature operation with undetermined sensitivity to gas contaminants.

The mechanism presented in this paper for our water-gas shift system shows that a wide range of potential catalysts exist which could serve as catalyst in the pressurized aqueous system. Essentially, any compound which can generate hydroxide, formate or carbonate at the reaction conditions will exhibit catalytic activity. Results of our experiments have demonstrated that even ammonia gas or ammonium hydroxide or carbonate can act as a catalyst in the pressurized aqueous system (10).

Table 1 presents some of the many chemicals which have been tested for water-gas shift catalyst activity in the one-liter batch system. Group 1 consists of high to medium activity metal carbonates while Group 2 is a listing of very low activity carbonate catalysts (mostly alkaline earths). Group 3 is a list of some of the most active catalysts (on a equimolar basis) tested. Group 4 consists of medium activity catalysts while Group 5 consists of low activity catalysts. In this ranking of high, medium, and low activity, sodium carbonate at 0.32M is used

Table 1. Aqueous Catalysts for the Water-Gas Shift Reaction

High to Medium Group 1	Very Low Group 2	High Group 3	Medium Group 4	Low Group 5
Carbonates of:	Carbonates of:			sodium salts of:
nickel	barium	Na_3 citrate	Na acetate	glyoxalate
cadmium	zinc	Na_2 oxalate	NaH carbonate	phenolate
potassium	magnesium	NaH oxalate	KH tartrate	pyruvate
sodium	strontium	K_2 tartrate	KH carbonate	malonate
silver	calcium	KNa tartrate	NaH_2 citrate	propionate
lithium		K_2 oxalate	Na formate	maleate
cesium		K quadroxalate	Na hydroxide	benzoate
copper			Na ketomalonate	

as the dividing point between high and medium activity while sodium carbonate at 0.16M concentration serves as the dividing point between medium and low activity. Very low activity is equivalent to sodium carbonate at $\leq$0.03M concentration. Figure 2 shows the effect of sodium carbonate concentration on catalytic conversion of carbon monoxide by the water-gas shift reaction at 300°C.

The aqueous catalyst system as used in a gas-liquid contacting scheme has no potential for catalyst surface contamination or pore plugging. Deactivation of the catalyst through chemical combination can be used to an advantage as a gas scrubbing system as discussed in the next section.

- Relationship to Coal Gasification Technology

In addition to its primary function of adjusting the H_2 to CO ratio in gas streams, the successful development of a shift conversion process based on the use of an aqueous catalyst system could have a significant impact on a number of gas processing streams associated with commercial coal gasification. Associated processes that are expected to be affected or eliminated due to use of the concept include gas quenching (gas liquor separation/gas cooling), raw gas treating, sulfur removal, conventional shift conversion, and steam generation.

It is envisioned that the raw gas from the coal gasifier can be fed directly in whole or in part to the shift conversion system. The system is expected to quench the gas as well as treat the raw gas. Laboratory data has demonstrated that the aqueous catalyst system will cause tars to be gasified in the system and that the system will remove H_2S from the gas stream. Use of the catalytic system should significantly reduce costs of raw gas treating and favorably impact acid gas removal costs. The total extent of H_2S removal has not been established as yet, but is expected to be significant and an important consideration of the process concept.

The use of a cheap material (Na_2CO_3) in approximately a six percent solution will be economically favorable over conventional supported shift catalysts; it is also expect to be less susceptible to deactivating forces. Steam requirements are expected to be significantly lower for the advanced system since the sensible heat of the raw gas leaving the gasifiers should supply the required heat for the process. In addition, ammonia is stripped by the system and ammonium compounds have also been shown to be excellent shift catalysts in the system. In addition, ammonia is generated as a by-product of many coal gasification processes and is therefore potentially a source of an excellent, available, cheap catalyst.

It is impossible at this point in process development to quantify the economic advantage of the advanced shift conversion system. However, it is obvious from the previous discussion that the process concept has potential to significantly impact commercial coal gasification technology. Key impacts resulting from the use of this system are envisioned to be:

- establishment of an improved water-gas shift conversion system;
- reduced gas cooling and gas liquor separation costs;
- increased carbon utilization by further gasification of tars;
- reduced cost of by-product recovery by removal of ammonia and phenols from the gas stream;
- reduced acid gas treatment cost by significant H_2S removal; and
- reduced steam generation cost due to utilization of the sensible heat of the raw gas.

CONTINUOUS EXPERIMENTAL SYSTEM

In order to advance the concept of aqueous water-gas shift conversion a bench-scale continuous reactor system was developed. The system which is shown in Figure 3 is assembled around a one-liter, high-pressure autoclave. An air driven gas compressor is used to circulate the reactant gas through a rotameter for gas flow measurement and into the reactor. The product gas exits the reactor through the primary condenser. A back-pressure regulator is employed to drop the product gas pressure to near atmospheric. The product gas then flows through a secondary condenser, gas volume meter, and gas chromatograph sampling loop. The cooling water temperatures and flows are monitored to provide data for an energy balance around the reactor system. The careful monitoring of gas flows and composition, as well as the catalytic solution composition, provide the needed input for mass balance calculations.

Inside the reactor, the gas enters near the bottom of the catalyst pool from the end of a dip tube. The gas bubbles up through the catalyst pool and enters the stirrer shaft at an opening near the top of the reactor cavity. At this point, the gas can proceed through the hollow stirrer shaft to the bottom of the catalyst pool and is discharged by the turbine impeller into the catalyst solution (the turbine actually generates the pressure differential which draws the gas through the hollow stirrer shaft to shaft bottom outlet). Alternately, the gas can proceed out of the reactor after entering the stirrer shaft by proceeding upward through the primary condenser which cools the gas stream and returns the vaporized water which has been condensed to the catalyst pool. The turbine impeller has a dual importance in the reactor system as it provides the required mixing of gas and liquid phases, and serves to "pump" the gas down into the liquid bath to increase the gas/liquid contacting. This type of reactor system has been recently demonstrated as an effective gas/liquid contactor (11).

Gas flow is monitored as both inlet and outlet gas volume. The gas composition is determined on both the inlet and outlet streams. The flow control is provided by regulating valves which vary the air flow to the air-driven compressor. A pressure regulator controls the feed gas pressure on the suction side of the compressor. In addition, regulating needle valves are used to vary the flow after it exits the compressor. The pressure in the reactor is limited by the back-pressure regulator.

The one-liter continuous reactor system was put in operation in June 1984. Results of initial shakedown and kinetic tests will be presented.

CONCLUSION

A new catalytic gas processing system is being used to perform the water-gas shift reaction with a pressurized aqueous catalyst solution at low temperature. The chemistry of the system has been documented using batch reactor tests and continuous gas processing is now being studied in a bench scale apparatus. The new process has numerous advantages over conventional shift technology which make it intrinsically compatible with advanced gasification systems which operate pressurized reactors.

ACKNOWLEDGMENTS

The continuous gas processing studies are being funded by the U.S. Department of Energy through the Morgantown Energy Technology Center. The authors wish to thank Dr. Hsiao-Ya L. Lai and Dr. Madhav R. Ghate of the Advanced Gasification Section at the Morgantown Energy Technology Center for their support of the research.

REFERENCES

1) Hawker, P. N. Hydrocarbon Processing (1982) 61,4, 183-187.

2) Ungermann, C. et al. J. Amer. Chem. Soc. (1979) 101, 5922-5929.

3) King, A. D., Jr; King, R. B.; Yang, D. C. J. Amer. Chem. Soc. (1980) 102, 1028-1032; King, A. D., Jr.; King, R. B.; Yang, D. C. J. Amer. Chem. Soc. (1981) 103, 2699-2704.

4) Casale, L., U.S. Patent 1,843,540, 1932.

5) Yoneda, K.; Kondo, S.; Abe, R. J. Chem. Soc. Jpn. (1941) 44, 385-391; Yoneda, K.; Honda, Y.; Momiyana, N.; Abe, R. J. Chem. Soc. Jpn. (1943) 46, 554; Yoneda, K.; Kondo, S.; Abe, R. J. Chem. Soc. Jpn. (1943) 46, 667; Yoneda, K.; Kondo, S.; Abe, R. J. Chem. Soc. Jpn. (1944) 47, 5-10.

6) Zieke, C. W.; Rosenhoover, W. A.; Gorin, E. Prepr., Div. Fuel Chem., Amer. Chem. Soc. (1976) 21, 7, 163-186.

7) Elliott, D. C. and Sealock, L. J., Jr. Ind. Eng. Chem. Prod. Res. Dev. (1983) 22, 426.

8. Sealock, L. J., Jr.; Elliott, D. C.; and Hallen, R. T. "Kinetics and Catalysis of Producing Synthetic Gases from Biomass," Final Report GRI-82/0038, NTIS PB83-188664, December 1982, 81pp.

9) Elliott, D. C.; Hallen, R. T.; Sealock, L. J., Jr. Ind. Eng. Chem. Prod. Res. Dev. (1983) 22,431.

10) Elliott, D. C.; Sealock, L. J., Jr.; Hallen, R. T. "Ammonia-Based Catalyst for Water-Gas Shift Reaction" patent application #510,908, July 5, 1983.

11) Gollakota, S. V. and Guin, J. A. Ind. Eng. Chem. Process Des. Dev. (1984) 23, 52-59.

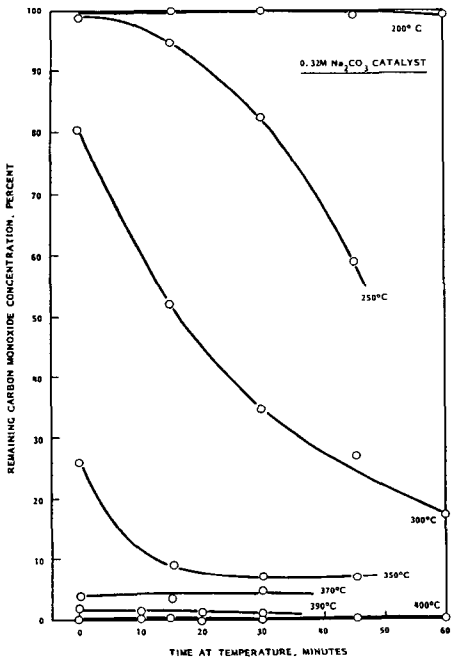

Figure 1. Temperature effect on catalytic conversion of carbon monoxide by the water-gas shift reaction.

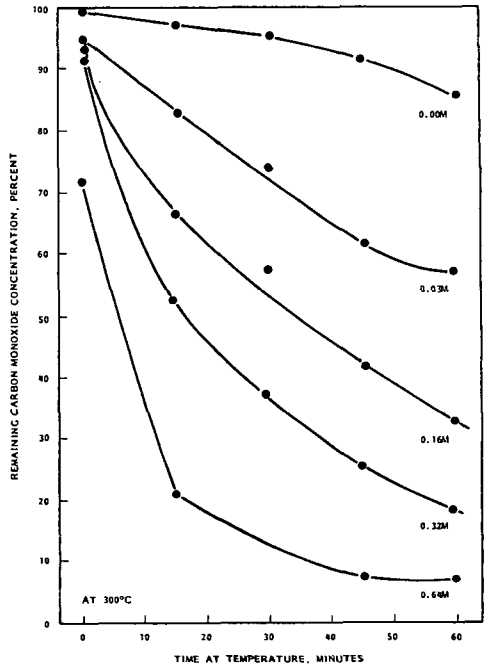

Figure 2. Sodium carbonate concentration effect on catalytic conversion of carbon monoxide by the water-gas shift reaction.

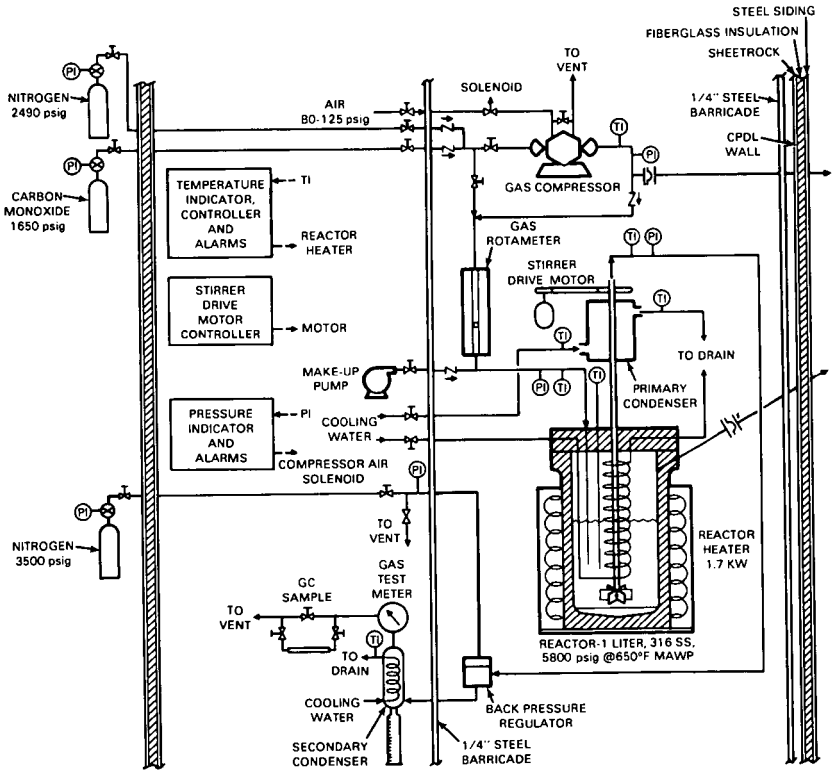

Figure 3. Continuous water-gas shift conversion reactor system.